International journal for science, technics and innovations for the industry

MACHINES TECHNOLOGIES MATERIALS

YEAR XII Issue 1 / 2018 ISSN PRINT 1313-0226 ISSN WEB 1314-507X

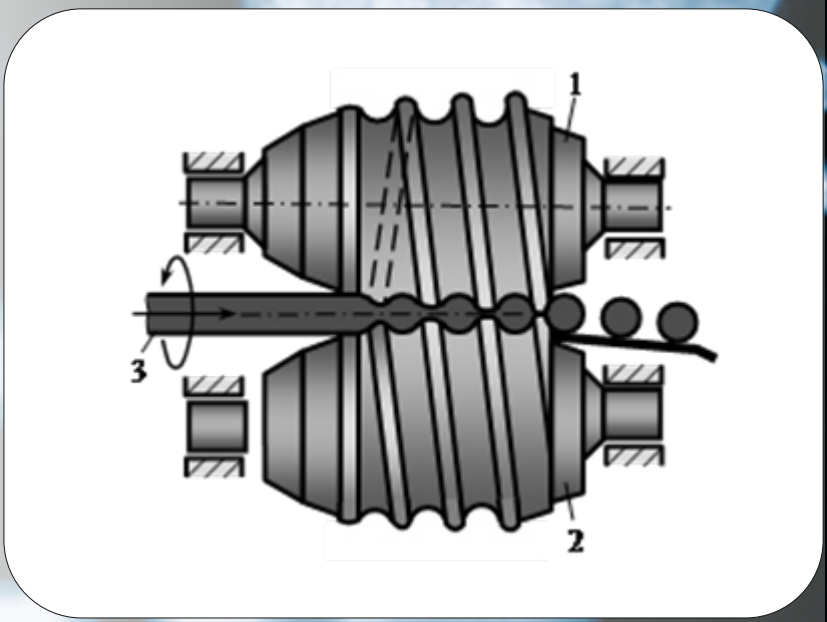

Published by
Scientific technical
Union of Mechanical Engineering "INDUSTRY 4.0"

MACHINES. TECHNOLOGIES. MATERIALS

INTERNATIONAL SCIENTIFIC JOURNAL

PUBLISHER

SCIENTIFIC TECHNICAL UNION OF MECHANICAL ENGINEERING "INDUSTRY 4.0"

108, Rakovski Str., 1000 Sofia, Bulgaria
tel. (+359 2) 987 72 90,
tel./fax (+359 2) 986 22 40,
office@stumejournals.com
www.stumejournals.com

ISSN PRINT 1313-0226, ISSN WEB 1314-507X, YEAR XII, ISSUE 1 / 2018

EDITOR-IN-CHIEF

Prof. D.Sc. DHC Georgi Popov,
President of Bulgarian Scientific and Technical Union of Mechanical Engineering

EDITORIAL BOARD

MEMBERS	SCIENTIFIC COMPETENCE
Prof. Dimitar Damyanov	Automatisation of production
Prof. Dimitar Karaivanov	Mechanics of machines
Prof. Dimitar Stavrev	Technologies and materials
Prof. Dimitar Yonchev	National and industrial security
Prof. Galina Nikolcheva	Machines tools and technologies
Prof. Hristo Shehtov	Automatisation of production
Prof. Idilija Bachkova	Automatisation of production
Prof. Ivan Kralov	Mechanics of machines
Prof. Ivan Parshorov	Technologies and materials
Prof. Ivan Yanchev	Machines and technologies
Prof. Ivo Malakov	Automatisation of production
Prof. Kiril Angelov	Industrial Management
Prof. Lilo Kunchev	Transport Equipment and Technology
Prof. Lubomir Dimitrov	Machines and technologies
Prof. Miho Mihov	Agricultural machinery
Prof. Miroslav Denchev	Ergonomics and design
Prof. Mladen Velev	Economics and Marketing
Prof. Nikolay Diulgerov	Technologies and materials
Prof. Ognyan Andreev	Production management
Prof. Petar Kolev	Transport Equipment and Technology
Prof. Roman Zahariev	Robotics
Prof. Sasho Guergov	Robotic systems and technology
Prof. Tsanka Dikova	Technologies and materials
Prof. Vitan Galabov	Mechanics of machines

MACHINES. TECHNOLOGIES. MATERIALS

INTERNATIONAL SCIENTIFIC JOURNAL

ISSN PRINT 1313-0226, ISSN WEB 1314-507X, YEAR XII, ISSUE 1 / 2018

EDITORIAL BOARD FOREIGN MEMBERS			
Prof. Adel Mahmoud	IQ	Prof. Marian Tolnay	SK
Prof. Ahmet Ertas	TR	Prof. Mark Easton	AU
Prof. Andonaq Londo	AL	Prof. Mart Tamre	EE
Prof. Andrei Firsov	RU	Prof. Maryam Ehteshamzade	IR
Prof. Andrzej Golabczak	PL	Prof. Michael Evan Goodsite	DK
Prof. Anita Jansone	LV	Prof. Movlazade Vagif Zahid	AZ
Prof. Aude Billard	CH	Prof. Natasa Naprstkova	CZ
Prof. Bojan Dolšak	SI	Prof. Oana Dodun	RO
Prof. Christian Marxt	LI	Prof. Oleg Sharkov	RU
Prof. Dale Carnegie	NZ	Prof. Páll Jensson	IS
Prof. Ernest Nazarian	AM	Prof. Patrick Anderson	NL
Prof. Esam Husein	KW	Prof. Paul Heuschling	LU
Prof. Ewa Gunnarsson	SW	Prof. Pavel Kovac	RS
Prof. Filipe Samuel Silva	PT	Prof. Per Skjerpe	NO
Prof. Francisco Martinez Perez	CU	Prof. Péter Korondi	HU
Prof. Franz Haas	AT	Prof. Peter Kostal	SK
Prof. Genadii Bagliuk	UA	Prof. Juan Alberto Montano	MX
Prof. Georg Frey	DE	Prof. Raul Turmanidze	GE
Prof. Gregory Gurevich	IL	Prof. Renato Goulart	BR
Prof. Haydar Odinaev	TJ	Prof. Roumen Petrov	BE
Prof. Hiroyuki Moriyama	JP	Prof. Rubén Darío Vásquez Salazar	CO
Prof. Dr. Ilir Doci	Ko	Prof. Safet Isić	BA
Prof. Iryna Charniak	BY	Prof. Sean Leen	IE
Prof. Ivan Svarc	CZ	Prof. ShI Xiaowei	CN
Prof. Ivica Veza	HR	Prof. Shoirdzan Karimov	UZ
Prof. Jae-Young Kim	KR	Prof. Sreten Savićević	ME
Prof. Jerzy Jedzejewski	PL	Prof. Stefan Dimov	UK
Prof. Jean-Emmanuel Broquin	FR	Prof. Svetlana Gubenko	UA
Prof. Jordi Romeu Garbi	ES	Prof. Sveto Cvetkovski	MK
Prof. Jukka Tuhkuri	FI	Prof. Tamaz Megrelidze	GE
Prof. Katia Vutova	BG	Prof. Tashtanbay Sartov	KG
Prof. Kazimieras Juzėnas	LT	Prof. Teimuraz Kochadze	GE
Prof. Krasimir Marchev	USA	Prof. Thorsten Schmidt	DE
Prof. Krzysztof Rokosz	PL	Prof. Tonci Mikac	HR
Prof. Leon Kukielka	PL	Prof. Vasile Cartofeanu	MD
Prof. Mahmoud El Gammal	EG	Prof. Yasar Pancar	TR
Prof. Manolakos Dimitrios	GR	Prof. Yurij Kuznetsov	UA
Prof. Marat Ibatov	KZ	Prof. Wei Hua Ho	ZA
Prof. Marco Bocciolone	IT		

C O N T E N T S

MACHINES

NEW STRUCTURE OF THE GANTRY CRANES LEVEL LUFFING JIB SYSTEM
MSc. (Eng). Bargazov E., Assoc. Prof. PhD. Uzunov T., Prof. PhD. Alipiev O., Principal assistant. PhD. Antonov S., Assoc. Prof. PhD. Bortyakov D. 3

OPTIMAL SELECTION OF COMPONENTS FOR A HYDRAULIC EXCAVATOR SWINGING MECHANISM
Assoc. Prof. Dr. Mitrev R. 8

ENERGY EFFICIENCY AND ENERGY POWER LOSSES OF THE TURBO-GENERATOR STEAM TURBINE FROM LNG CARRIER PROPULSION SYSTEM
PhD. Mrzljak Vedran, PhD. Senčić Tomislav, Prof. Prpić-Oršić Jasna 12

TECHNOLOGIES

THE DEVELOPMENT OF CALIBRATION FOR THE ROLLING BALLS OF DIAMETER 40 MM IN CONDITIONS OF JSC "SSGPO"
D.t.s., professor Naizabekov A.; c.t.s., associate professor Lezhnev S.; Stepanov E., PhD Panin E. 16

EXTRACTION OF PRECIOUS METALS FROM A PYRITIC CONCENTRATE PRETREATED BY MICROBIAL OXIDATION
Irena Spasova, Marina Nicolova, Plamen Georgiev, Stoyan Groudev 19

ADVANCED HYDROGEN STORAGE TECHNOLOGIES
Gjorgji Dosev, Nikola Sokolov, Assoc. Prof. Aleksandar Kostikj, PhD 21

TECHNOLOGICAL LINE CONTROL VERIFIED ON HIL PLATFORM
Ing. Talian P., Perduková D. 24

FUNCTIONAL AREAS AND ARCHITECTURAL FRAMEWORK FOR THE MANAGEMENT OF THE ELECTRON BEAM WELDING INSTALATION
Assistant eng. Dzharov V., Assoc. Prof. Eng. Koleva E. 28

MATERALS

THE RESEARCH PROCESS OF ACTIVE DIELECTRICS: SYSTEM INTERCONNECTIONS
Dr. of Technical Sciences Pecherskaya E.A., M.Sc. Golubkov P.E., Shepeleva Y. V. 31

EFFECT OF BORONIZING PARAMETERS AND MATRIX STRUCTURES ON THE WEAR PROPERTY OF DUCTILE IRON
Ass. Prof. Dr. Toktaş A., Ass. Prof. Dr. Toktaş G., MSc. Mech. Eng. Gülsün K. 33

EFFECTS OF MECHANOCHEMICAL TREATMENT OF ThO2 WITH UO3 AND CeO2
Assoc. Prof. P. Kovacheva PhD, Prof. D. Todorovsky DSc, M. Sc. N. Mirchev 37

PECULIARITIES OF Fe POWDER CONSOLIDATION IN CONDITIONS OF SPARK-PLASMA SINTERING
Prof., Dr. of Science Syzonenko O, PhD Prystash M, Torpakov A. 41