INTERNATIONAL SCIENTIFIC JOURNAL

trans & MOTAUTO WORLD

ISSN PRINT 2367-8399
ISSN WEB 2534-8493

YEAR VIII, ISSUE 2/2023









SCIENTIFIC TECHNICAL UNION OF MECHANICAL INGENEERING "INDUSTRY 4.0"
108 RAKOVSKI STR., SOFIA 1000, BULGARIA

INTERNATIONAL SCIENTIFIC JOURNAL

TRANS MOTAUTO WORLD

PUBLISHER:

SCIENTIFIC TECHNICAL UNION OF MECHANICAL ENGINEERING INDUSTRY-4.0

108, Rakovski Str., 1000 Sofia, Bulgaria
tel. (+359 2) 987 72 90,
tel./fax (+359 2) 986 22 40**,**
office@stumejournals.com
www.stumejournals.com

ISSN PRINT 2367-8399
ISSN WEB 2534-8493
YEAR VIII, ISSUE 2 / 2023

EDITORIAL BOARD

CHIEF EDITOR
Prof. Petar Kolev, Bulgaria

MEMBERS:

Prof. Ahmet H. Ertas, TR
Prof. Aleksandar Kostikj, MK
Prof. Andrey Ferenets, RU
Prof. Angel Dimitrov, BG
Prof. Beti Angelevska, MK
Prof. Dainis Berjoza, LV
Prof. Dan Scarpete, RO
Prof. Daniela Todorova, BG
Prof. Emilia Andreeva-Moschen, AT
Prof. Hristo Stanchev, BG
Prof. Igor Penkov, EE
Prof. Igor Smirnov, UA
Prof. Igor Taratorkin, RU
Prof. Iliyan Lilov, BG
Prof. Lech Sitnik, PL
Prof. Ljudmila Boyko, UA
Prof. Madaminjon Aripdzanov, UZ
Prof. Martin Kendra, SK
Prof. Massimo Borghi, IT
Prof. Miho Mihow, BG
Prof. Murat Dogruel, TR
Prof. Natalia Sidenko, LV
Prof. Natasa Tomic-Petrovic, RS
Prof. Nikolay Georgiev, BG
Prof. Nikolay Ovchenkov, RU
Prof. Oleg Sharkov, RU
Prof. Pepo Yordanov, BG
Prof. Polatbeg Zhunisbekov, KZ
Prof. Rinat Kurmaev, RU
Prof. Rosen Ivanov, BG
Prof. Sanjin Troha, HR
Prof. Teymuraz Kochadze, GE
Prof. Tomaz Morchadze, GE
Prof. Vadim Zhmud, RU
Prof. Valyo Nikolov, BG
Prof. Zoran Jovanovic, RS

RESPONSIBLE SECRETARY:
Prof. Nikolay Tonchev, Bulgaria

C O N T E N T S

TRANSPORT TECHNICS. INVESTIGATION OF ELEMENTS. RELIABILITY

Modification of the interior of a passenger car for the needs of fisherman
Vadym Ishchuk, Jan Dižo, Dalibor Barta, Stanislav Marcin 32

Investigation of the causes to autotruck cooling jacket defects
Rositsa Gavrilova, Ilian Mitov, Svetla Yankova, Rozina Yordanova, Boyan Yordanov 36

Self-Excited Acoustic System: enhancing quality control
Jan Przepióra, Michał Pietrzak 40

TRANSPORT. SAFETY AND ECOLOGY. LOGISTICS AND MANAGEMENT

Tools for calculating the emission of pollutants in transport
Aleksandar Manojlović, Snežana Kaplanović, Jelena Trifunović, Irena Milosavljević 43

Assessment of the risk of adverse events in aviation accidents
Leonid Vinogradov, Yulija Soldatova, Alekseij Nasibulin, Vladislav Turko 47

Different aspects influencing modal split, from view of sustainable development and reducing of greenhouse gas emissions
David Juřík, Vít Janoš 49

Analysis of pedestrian road safety in the Republic of Croatia
Tomislav Kučinić, Marijan Rajsman, Andrej Kunštek, Želimir Velić 53

New temptations in the auto world in post-covid era
Nataša Tomić-Petrović 57

VEHICLE ENGINES. APPLICATION OF FUELS TYPES. EFFICIENCY

Effect of adding hydrogen to a primary fuel on enjine operating modes
Koba Lortkipanidze , Vladimer Gvetadze, Teimuraz Kochadze 59

Modification of the interior of a passenger car for the needs of fisherman

Vadym Ishchuk[1,*], Jan Dižo[1], Dalibor Barta[1], Stanislav Marcin
University of Žilina, Slovak Republic[1]
vadym.ishchuk@fstroj.uniza.sk

Abstract: *The main objective of the paper is to design a structure for the interior of the Hyundai ix20 passenger car, which is used by recreational fishing enthusiasts. The authors set out to use the luggage compartment (boot) of the vehicle appropriately for the placement of the multifunctional folding structure. The structure is designed to allow the most effective utilization of each of its components. The individual parts of the structure can, for example, be employed to assemble a table. Moreover, it is suitable for storing things needed for fishing, camping, and travelling. An integral part of the arrangement is a folding bed for two people. One of the design purposes was the comfort and uncomplicated operation of the entire structure by the user. The authors attended to carry out the modification without any interference into the interior or exterior of the vehicle. In addition, one of the conditions was to ensure free access to the components of the mandatory equipment of the car. The authors designed the structure in order to ensure the simple handling of its individual parts along with its simple installation in and removal from the vehicle. From the point of view of safety, a calculation of the stressed parts of the bed structure was performed. Thus, the structure was designed and constructed with regard to minimising the reduction of the original vehicle luggage compartment. In addition, the condition of no interference into the interior or exterior of the vehicle was met*.
Keywords*: FISHING, STORAGE, FISHING EDITING, HYUNDAI IX20*

1. Introduction

Car improvements for fishing or camping are becoming more and more common. The availability of cars is very high these days. It is usually standard for most people in Europe to own a car. Car price relations are relatively low compared to the past when only the wealthiest could afford to own a car. As the number of cars grows, there are more opportunities to test and modify individual car components to better suit the owner's requirements [1, 2].

So these days there is a big increase in vehicle improvements for the needs of fishermen or travelers. In terms of modern capabilities, vehicles are much better suited to converting or towing a travel trailer than those used in the past. Vehicles are manufactured with engine power, which is usually at least 50 kW. Previously, it was engine power that was the limiting parameter. The power and technical parameters of the braking system limited the size and weight of the travel trailer lodgings and the number of items carried. Also, the interior design and technology used in production are radically different [3, 4].

More and more companies are specializing in modifications to car interiors to suit the owner's requirements. Today, modifications that can be easily fitted to the vehicle and which provide a complete camping vehicle are in vogue, and once parts of the design have been removed, the vehicle is in its original working condition. By combining several mutually compatible components, a multitude of options can be created [5].

2. Proposing a finishing solution for the chosen vehicle

The multifunctional, modular folding construction for use of the vehicle space provides a convenient and efficient solution for organizing storage and convenient use of the car luggage boot. Thanks to the individual boxes that are attached and which form a supporting part of the structure, it is possible to create a convenient storage system for clothes, shoes, fishing gear, and other items. In addition, the box space can be used to accommodate a gas cooker for cooking in the great outdoors or when traveling or fishing. Also, an automotive cooler can be placed in this space that is powered by the car's power outlet to keep food fresh and chilled while you're traveling. When the rear seats are folded down, the construction parts can be joined together to create a sleeping accommodation for comfortable sleeping or relaxing in nature. This is especially useful for camping or long car journeys when finding a comfortable place to sleep. It is also possible to use the structure to create a table for eating outdoors.

The multifunctional construction (Fig. 1 and Fig. 2) consists of the following components:

1 - boxes (4pcs),,

2 - box covers (4pcs),

3 - sleeping accommodation and table plywood sheets (2pcs),

4 - telescopic table legs with adjustable height (2pcs).

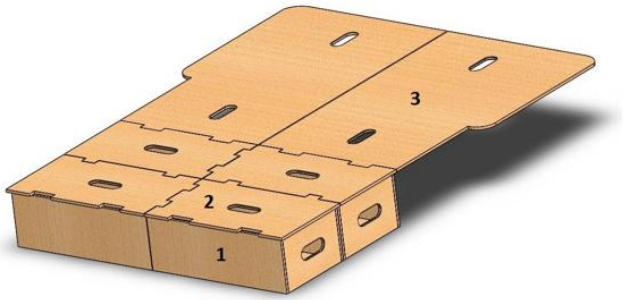

Fig. 1 *Sleeping accommodation*

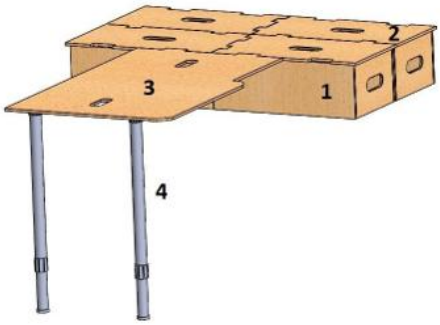

Fig. 2 *Table*

Another advantage of modular construction is that it can be installed without interfering with the car interior and requires no special tools or skills, so it can be installed by any car owner himself without incurring additional service costs. Thanks to their folding construction, the modules can easily be stowed away outside the vehicle or put back in when needed. This makes the construction versatile and easy to use not only in the car but also outdoors, camping, or fishing.

3.1 Materials for Production of Prototype Parts

The proposed construction can be made from different materials, including poplar or birch plywood. Both of these materials are widely available and have a low cost, making them an attractive choice for manufacturing. They are also well-suited as a material due to their strength and durability.

However, an important aspect in the manufacture of the proposed construction is surface treatment to prevent mechanical damage and increase service life. This requires that the surface layer of the product be able to retain liquids, which can then be easily wiped away. Therefore, low moisture absorption of the surface is an important factor for the durability of the proposed construction.

Ideally, the surface layer of the material should have zero moisture absorption to prevent moisture from penetrating the material. This will help to avoid the appearance of various defects such as through-holes, splitting, or warping. To achieve that goal, the material surface can be processing in a variety of ways, such as by coating it with water repellents or impregnation it with special solutions.

Therefore, when choosing the material for the proposed construction, its strength, durability, accessibility, and possibility of surface treatment to prevent mechanical defects and increase service life must be taken into account. If the right choice and processing of the material the proposed construction can remain reliable and functional for a long time.

4.2 Strength calculation of the proposed design

The strength calculation of the proposed construction was calculated and applied to the most critical point on the plywood sheet of the sleeping accommodation. The peak of stress occurs when entering and exiting the vehicle when a person's entire weight can be transferred to a relatively small area. The area represents the knee joint, on which the total weight is concentrated. The calculation must take into account a higher weight than the average adult to ensure good reliability and safety. Human body weight of 90 kg was taken into account and the load was concentrated in the center of the sheet, where the stress is greatest.

The diagram required for the calculation is shown in Fig. 3.

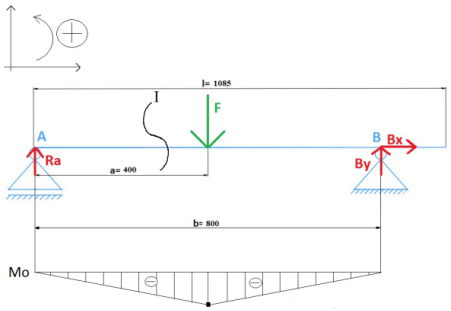

Fig. 3 *The diagram of bending stress*

Reactions and moments concerning the selected point are calculated according to formulas (2), (2), and (4). The value of the applied force from formula (1) must also be calculated.

$$F = m \cdot g = 90 \cdot 9{,}81 = 822{,}9[N]; \tag{1}$$

$$\sum Fi_x = 0 \Rightarrow Bx = 0; \tag{2}$$

$$\sum Fi_y = 0 \Rightarrow Ra + By - F = 0 \Rightarrow$$
$$By = F - Ra = 829{,}9 - 411{,}45 = 411{,}45[N]; \tag{3}$$

$$\sum Mi_b = 0 \Rightarrow F \cdot a - Ra \cdot b = 0 \Rightarrow$$
$$Ra = \frac{F \cdot a}{b} = \frac{829{,}9 \cdot 400}{800} = 411{,}45[N]. \tag{4}$$

After calculating the individual values of forces and reactions, the bending moment value M_o must be calculated according to formulas (5) and (6). To derivation the bending moment formula M_o, it is necessary to make an imaginary cut. The imaginary cut is shown in Fig. 3 as a wave and marked with the Roman numeral I. The following boundary conditions must also be specified criteria for the calculation $x\epsilon(0\ ,\ a)$.

$$\sum M_O(0) = 0; \tag{5}$$

$$\sum M_O(a) = -Ra \cdot a = -\frac{F \cdot a^2}{b} =$$
$$= -\frac{822{,}9 \cdot 400^2}{800} = 164580[N \cdot mm]. \tag{6}$$

The final bending stress calculation σ_o equires the section modulus W_o, which can be calculated from formula (7).

$$W_o = \frac{1}{6} \cdot b \cdot h^2 = \frac{1}{6} \cdot 400 \cdot 15^2 = 15000[mm^2]. \tag{7}$$

After the calculation, we substituted the values obtained into formula (8) and obtained the final bending stress σ_o.

$$\sigma_o = \frac{|M_o(a)|}{W_o} = \frac{|-165980|}{15000} = 11{,}065[MPa]. \tag{8}$$

The calculation results were compared with the values in Table 1. As can be seen, the resulting bending stress value σ_o does not exceed the limit bending stress value along the grain for the given material presented in Table 1. It can also be stated that the plywood will support the calculated bending stress without exceeding the limits of bending stress.

Table 1. Properties of construction waterproof plywood.

	Value
Nominal size [mm]	1200x1200x15
Bending strength along the grain [MPa]	39,3
Bending strength across grain [MPa]	14,7
Breaking strength [MPa]	0,78

A safety factor *k* was also calculated from formula (9). It was confirmed that the selected material has a high safety factor and was therefore chosen correctly.

$$k = \frac{\sigma_D}{\sigma_o} = \frac{39{,}3}{11{,}065} = 3{,}55. \tag{9}$$

Fig. 4 shows the sheet of plywood for which the calculation was carried out.



Fig. 4 *Critical point of construction*

3. Results

For the final construction, it was decided to choose 15-millimeter thick birch plywood. Birchwood is characterized by its flexibility and strength. The plywood consists of veneers glued together. The veneers are overlapped so that the texture of the individual veneer layers is perpendicular to one another.

Assembly of the final construction began with four boxes (Fig. 5), which were made to suit the optimum shape of the luggage boot (Fig. 6). Furniture grade 7.0 x 50 ZN confirmat screws were used to ensure sufficiently tight fixing of the single box parts to each other. A sufficiently sound connection of the box parts was achieved by using six confirmat screws on the bottom of the box, with a further

eight confirmat screws used to secure the side parts. Therefore, there are a total of fourteen confirmat screws per box.



Fig. 5 *Plywood boxes*



Fig. 6 *Boxes in the luggage boot of the vehicle*

The same process was used to cut the plywood sheets for the bed and dining table. The priority was to make the plywood sheets follow the silhouette of the car interior as closely as possible. Storage and practicality also had to be considered.

Figure 7 shows a sleeping berth for two adults. The first part of the sleeping berth, closer to the front seats, is formed by two plywood sheets that were originally intended to be symmetrical, but it turned out that they didn't fit in the car, so they had to be fair parts with the contour separately. The second part in the luggage boot area consists of four box covers that form a plane with the first part. The sleeping accommodation is 180 centimeters long. The width at the widest point is 132 centimeters and at the narrowest point 115 centimeters. The area with the smallest width is for the legs, so there is no reduction in sleeping comfort.



Fig. 7 *Sleeping accommodation in the luggage boot of the vehicle*

After manufacturing the boxes, and cutting out the plywood sheets for the sleeping accommodation and the table, the boxes must be screwed together in one permanent position. M8 bolts and furniture hinges are used for this. To maintain regular spacing between the drawers, furniture silicone washers have been used.

The two plywood sheets that serve as part of the sleeping accommodation can be used as a table, see Fig. 8. However, there have been some changes from the original project. The original idea envisaged a table that would consist of just one sheet of plywood, no matter which sheet we used, the other would be unused. This concept was kept, but it was decided to use both sheets because some people go camping or fishing in groups and may require a larger table. So there is a choice of two options: a small table for two or three people from a single sheet of plywood, or a larger table for six or seven people by using two sheets of plywood, see Fig. 9. Reequipment of a sleeping accommodation into a table is easy with simple manipulation. Each sheet has a ready-made attachment at the bottom to fit a telescopic leg that can be extended between 60 and 90 cm. The advantage is that no tools are required for this operation.



Fig. 8 *Table consisting of a single sheet of plywood*



Fig. 9 *Table consisting of two sheets of plywood*

4. Conclusion

For the final construction, it was decided to choose 15-millimeter thick birch plywood. Birchwood is characterized by its flexibility and strength. The plywood consists of veneers glued together. The veneer is overlapped so that the texture of the individual veneer layers is perpendicular to one another.

The sleeping accommodation for two adults has been designed with the vehicle's interior and ease of use in mind. The sleeping accommodation has been designed to ensure comfort while

sleeping. The option of using sheets of plywood as a table has been envisaged, making the final construction more versatile and easy to use.

Converting the sleeping accommodation into a table is done by simple manipulation. Each sheet has a ready-made attachment at the bottom to fit a telescopic leg, which can be extended between 60 and 90 cm. The advantage is that no tools are required for this operation.

Overall, the car bed design is an efficient and practical solution for those who prefer fishing or relaxing outdoor activities.

4. Acknowledgment

This contribution was supported by the project KEGA 031ŽU-4/2023: Development of key competencies of the graduate of the study program Vehicles and Engines.

This contribution was supported by the project KEGA 036ŽU-4/2021: Implementation of modern methods of computer and experimental analysis of the properties of vehicle components in the education of future vehicle designers.

5. References

1. M. Bartoš, V. Bulej, M. Bohušík, J. Stanček, V. Ivanov, P. Macek Transportation Res. Procedia, **55**, 837-844 (2021)
2. Z. Hryciów, W. Krasoń, J. Wysocki, Eksploatacja i Niezawodność/Maint. and Reliability, **23**, 422-429 (2021)
3. P. Govender, M. Dewa, S. Afr. J. of Ind. Eng., **33**, 69-82 (2021)
4. H.-S. Ji, S-Y. Kim, K.-S. Kim, Y.-D. Jun, International J. of Recent Technol. and Eng., **8**, 336-341 (2019)
5. P. Ünal Gürkan, G. Kayseri Özçelik, H. Diren Mecit, H., Autex Research J., **22**, 272-281 (2022)

Investigation of the causes to autotruck cooling jacket defects

Rositsa Gavrilova, Ilian Mitov, Svetla Yankova, Rozina Yordanova, Boyan Yordanov

University of Chemical Technology and Metallurgy - Sofia, Bulgaria

r.gavrilova@abv.bg

Abstract: *Defects in the cooling jacket occur for a variety of reasons. This type of details works in severe heat load conditions - fluctuating fluid pressure, mechanical friction and corrosion. The reason for appearance of defects in auto truck engines is often the type of material from which their individual parts are made. For various reasons, they are susceptible to the influence of natural wear, material fatigue and the complex action of many physical and chemical fast-flowing processes.*

One of the main parts of internal combustion engines is the cooling jacket. This part operates under severe thermal stress conditions caused by mechanical friction in contact with the piston, fluctuating pressure where the refrigerant fluid moves, and corrosive action from that same fluid containing antifreeze. The listed factors require the material from which this part is made to have strength and good wear and corrosion resistance - prerequisites for a long service life.

Therefore, it is important to identify the exact causes of cooling jacket defects and to found ways to prevent them.

The examined details are analyzed by standard methods for chemical and metallographic analysis, as well as for mechanical tests.

Keywords*: CARGO TRANSPORT MACHINES, COOLING JACKET, DEFECTS*

1. Introduction

As a general, larger engines are water cooled for reason that water can remove more heat than air and thus has a larger cooling capacity. Water can be cooled remotely e.g. in a location away from the engine. This makes the cooling water system design more flexible. A cooling water temperature of approximately 80°C and cooling water pressure of 3 bar is standard for most engines operating under load. An engine cooling water system consists of a thermostat, cylinder sleeve, cooling water pump and a heat exchanger (radiator), [1, 8-10].

When the cooling water (jacket water) is cold, the thermostat by-passes the radiator and the temperature of the cooling water gradually increase until it reaches the optimum temperature. When the cooling water is too hot, the thermostat directs it towards the radiator where the heat is dissipated in order that the engine does not overheat.

The cooling water system is dosed with anti-freeze in order to prevent the water freezing in sub-zero temperatures (<0°C). If the cooling water should freeze, the engine would most likely be severely damaged because the water would expand and place large mechanical stresses upon the engine components. It is not unusual for the cylinder block to crack if the cooling water freezes.

Corrosion inhibitors are added to the cooling water system to protect the engine's internal components. The inhibitors keep the heat exchanging surfaces of the engine clean and prevent scale or rust accumulation. Fouling of the surfaces within the cooling water system would reduce the heat transfer rate and increase the risk of the engine overheating due to lack of cooling. [8-10].

Diagnostics of the cooling jacket is necessary in the following circumstances - a decrease in the intensity of cooling or a violation of its density. A drop in the pressure of the air supplied to the cylinders can occur as a result of gaps other than the intake or exhaust valve and through the piston rings, as well as through the sealing to the cooling jacket. This type of leak can be caused by internal (for the engine) or external damage to the elements - most often cracks in the cooling jacket.

There are many possible failures, out of different nature - the cooling fluid gets into the lubrication system, causing either accelerated wear of the friction parts and an increase in the amount of oil in the crankcase, or the cooling fluid enters the combustion chamber and leads to the penetration of the cooling system of gases under high pressure from the working space.

The reduced intensity of cooling in the system leads to an abnormal increase in the operating temperature.

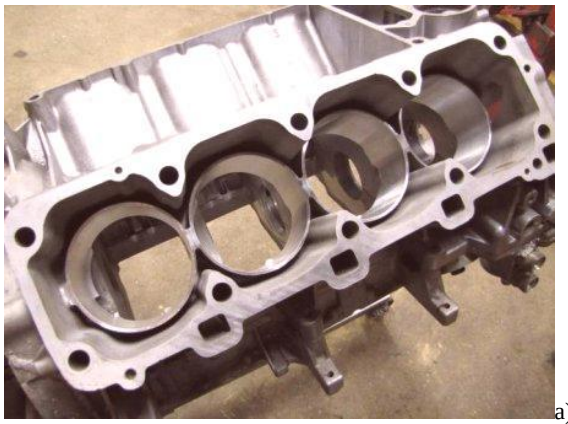

a)



b)

Fig. 1 *Engine cooling jacket demo photos, a, b*

The listed "hidden" defects are the most common causes of cylinder block deformations and they are inherent of cast iron blocks. Deformation of the unit, made of cast iron or alloy (cast iron or aluminum), can lead to engine overheating or uneven heating during operation. Therefore, restoration of the cylinder block is carried out together with cooling jasket and in addition to complete cleaning -with a mandatory check for tightness of the channels of the cooling system (cooling jacket) and inspection of the system of cylinders - pistons - cooling jackets to identify defects.

In the present work, the causes of defects in a cooling jacket of an auto truck engine, whose inner surface forms its working space, are investigated.

Complex analysis includes the following methods are made:

- Establishing the brand of the alloy;
- Macrostructural metallographic analysis of reasons, led to the destruction of the part - defects in the metal: cracks, voids of various origins, porosity, liquation, segregation, etc.

- Microstructural metallographic analysis to define the type of structure and distribution of characteristic phases.
- Micro-hardness measurement.

2. Investigation of cooling jacket showing defects

2.1. Chemical analysis of material

The chemical analysis is made with equipment of the company "BRUKER AXS"-Germany. The composition is shown in Table 1.

Table 1 *Chemical composition of cooling jacket*

Chemical element, wt. %								
C	Si	Mn	Cr	Ni	S	P	Mo	Cu
3.44	2.01	0.86	0.22	0.09	0.055	0.36	0.40	0.23

The material for this auto-detail must have good casting qualities and be easily processed on metal-cutting machines. In accordance with these technological requirements and according to data from analysis, gray cast iron with pearlite structure and small additions of alloying elements was used as such material, (table 1), i.e. meeting the requirements for manufacture of this type of engine part, [1].

In fig. 2 and fig. 3 are shown pieces of the defective cooling jacket, general view and macro photographs.

Even at low magnification, the way in which the outer surface of the part is affected is visible - there are clearly define voids and porosity that can be classified according to existing standards.

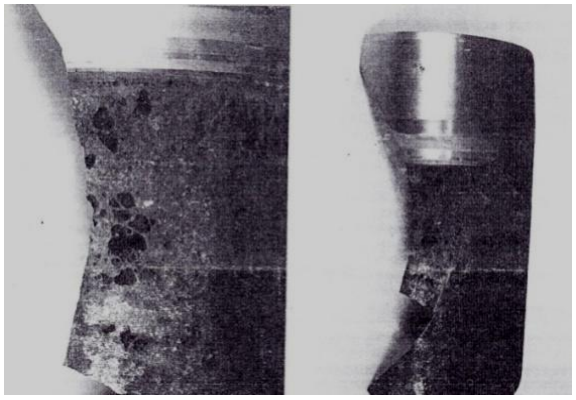

Fig. 2 *General view of parts with a porosity defect*

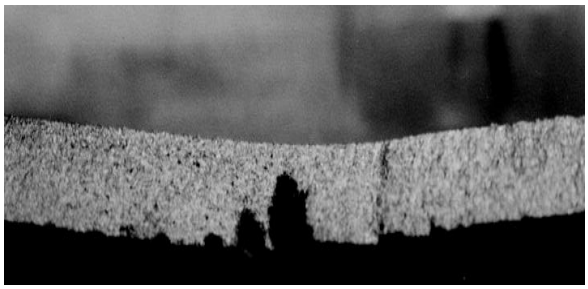

Fig. 3 *Macro photography of the observed defects, magnification 150x*

On the surface of the cooling jacket part, groups of tangentially located, relatively deep cavities are observed, reaching in places up to 2/3 of the wall thickness (Fig. 3, Fig. 4), which can be classified according to BDS 5177-85 "Defects of castings", such as gas pores (code 41), sieve porosity (code 42), suction (code 43) and even casting mass discrepancy (code 18), [2, 5].

It can be assumed that inaccuracies were made in the technology of the casting process and the tolerances for the mass of the cast metal part were exceeded, but such a study was not carried out, since the whole part is not available, but only with the affected part of it. External, open cavities are clearly visible in the photos.

2.2. Macrostructural metallographic analysis

The analysis includes a visual examination of the inner and outer surfaces of the cooling jacket. The cast part is characterized by an inner surface without visible damage from mechanical wear. There is no traces of the above types of wear have been registered: erosion, abrasive or corrosive [1, 6].

The outer surface of the casting is covered with defects and is severely damaged (Fig. 4, a, b, magnification 500x).



a)

a) Defect of the "gas cavities" type, magnification 500x

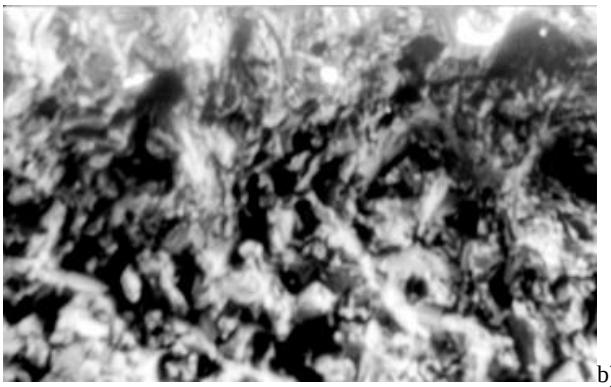

b)

b) Defect of the "sieve-like porosity" type, 500x

Fig. 4 *Defects on the outer surface of the casting*

The inner surface turns to be unchanged, which excludes the course of oxidative or other chemical processes in the volume of the part.

On the metallographic specimens there are also closed (internal) pores with oxidized surfaces, most likely formed by impaired of casting technology by separation of gases from the metal or suction of gases during spillage (code 41) [2, 4, 5].

The pores, located directly on and below the surface of the cast metal, most often have oxidized, relatively smooth walls. In some places they come to the surface. "Sieve porosity" (code 42) is observed in other areas [2]. Larger open and sunken areas with oxidized walls on the surface of the casting (Fig. 4 a, b) can be defined as suctions (code 43) [2, 4, 5]. All above listed heterogeneity indicates evidence of foundry defects.

In support of the assumption that the defects are foundry, i.e. the cavities are not obtained as a result of corrosion between the coolant (antifreeze, water) and the metal, and the cylinder is installed in the engine with this defect (gas pores, sieve porosity, suction) microstructural metallographic analysis is performed.

2.3. Microstructural metallographic analysis

Metallographic samples were prepared according to standard methods, [3, 6]. The photographic material illustrating the microstructure of the metal matrix, both near the pores (Fig. 5, a, b) and in the undamaged places (Fig. 6, a, b), does not show a difference in structure. This observation gives us reason to believe, that if the cavities were obtained as a result of chemical interaction of metal (in this case cast iron) with the coolant, the structure of the metal base in defects and defect-free areas would not be identical.

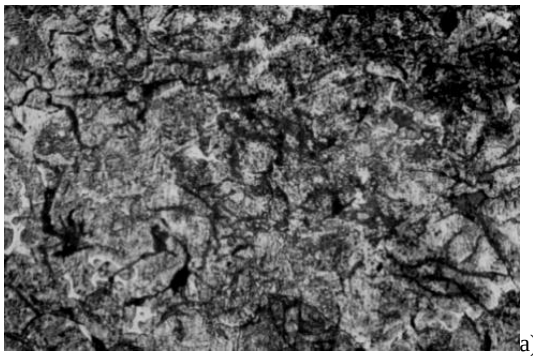

a)

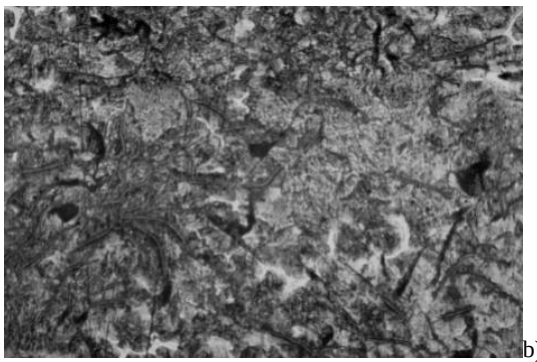

b)

Fig. 5 *Microstructure of the metal matrix near the pores, 240x*

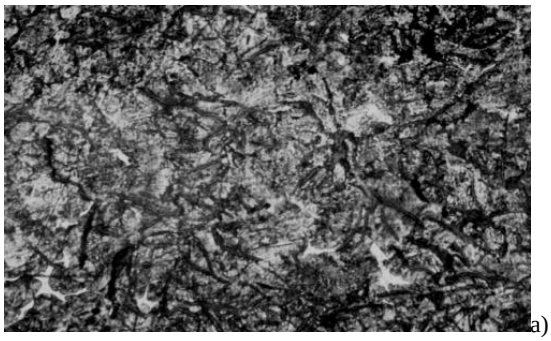

a)

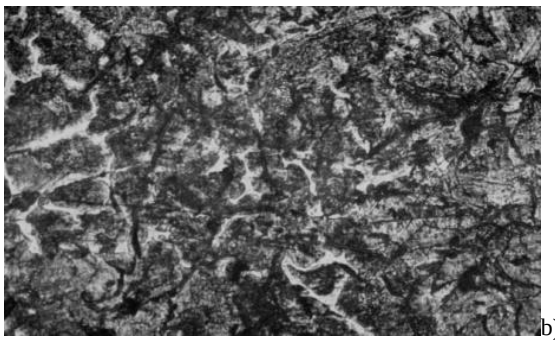

b)

Fig. 6 *Microstructure of the metal matrix in the affected areas, magnification 240x*

An assessment of the graphite inclusions was made on a non etched section (Fig. 7÷9). According to BSS EN ISO 945, [5], graphite is lamellar, evenly distributed, with very large inclusions, approximately 2.0 μm².

The microstructure of the metal matrix is the same in different sections of the part, it is made of lamellar perlite and some places with distributed eutectic inclusions (viewed at higher magnification), [2, 3, 5, 6].

The surface of the defects was carefully examined.

On the non etched section, in the places with pores damages, a non-dense surface oxide layer with variable thickness is observed (Fig. 7÷9, x240). Depending on the amount of oxygen or oxygen-containing agent reaching the metal surface, sub-layers of different types of iron-based oxides may have formed in the oxide layer.

Typically, the outer sub-layer contains brittle Fe_2O_3. Immediately below it is a layer of lamellar separations, which are known to be formed in the process of high-temperature oxidation of iron [5, 6], in temperatures above 560°C.

Therefore, both FeO and the layer unknown to us could be obtained as a result of oxidation that took place at temperatures higher than 560°C. Such structures cannot be obtained by low-temperature (<560°C) oxidation, for example as a consequence of chemical interaction between the surfaces with working fluid, because in the studied detail due to the cooling agent the temperature should not exceed 100÷150°C [1, 8÷12]. In this case, in the oxidation of the cooling jacket detail (i.e. in chemical interaction with activated of coolant), an oxide layer consisting of more complex oxides - Fe_2O_3 or Fe_3O_4 would be observed.

The fact that a layer composed of more complex oxides has formed means that unwanted oxidation has taken place in an incorrect technological process. This can also be the cause of the observed defects.

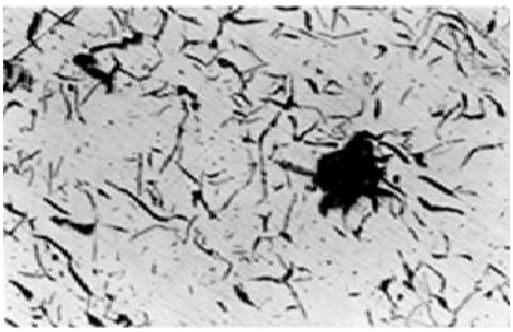

Fig. 7 *Oxidized cavity surface, 240x*

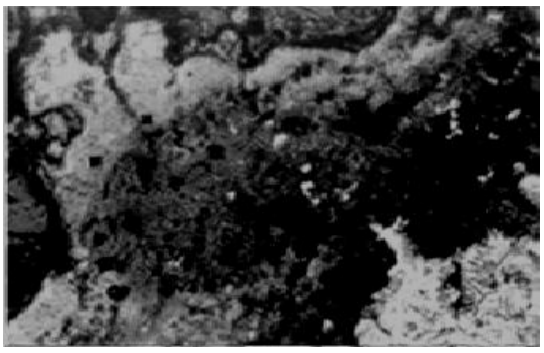

Fig. 8 *Additional oxide layer surrounding the oxidized cavity in depth, 240x*



Fig. 9 *A layer, probably containing more complex oxides, diffusely distributed over a large area, 240x*

3. Measurement of microhardness

Data on the microhardness [6, 10], measured on inside surface, are shown in Table 2:

Table 2 Microhardness measurement

Microhardness measurement, **HV 0,05**	
Surface of the detail	Inner surface of the detail
396, 400, 333,294, 383	340, 323, 360, 327, 346, 500, 383

Some reduction in microhardness in the surface area could result from indirect, local high-temperature decarburization. This confirms the assumption of the presence of gas porosity, which is most likely the result of the combination of carbon from the liquid metal with oxygen in the casting process, which led to the formation of unwanted gas phase, (CO), [7].

(When measuring microhardness, HV 0.05, the force F [N] is with value of 0.4903)

4. Conclusions

In conclusion, it can be said that many factors consistently affect the efficient operation of the engine. It is impossible to give an unambiguous answer as to how long the mechanism will last and whether the cooling jacket will not show a purely operational defect, a defect as a result of incorrectly performed production process or a defect of poorly selected material for detail manufacture.

Based on the study of a defective cooling jacket, the following conclusions are made:

1. The damaged outer surface on detail (Fig. 2÷4) is the main reason for different thickness of the cooling jacket (gas pores, liquation infiltrates, ets.). According to the operating conditions - heat load up to 100÷150oC and variable gas pressure, it can be argued that this has also helped to destroy the cooling jacket part.

2. The observation microstructure of the metal matrix, both near the pores and in the undamaged places (Fig. 5, 6) indicate, that if the cavities were obtained as a result of chemical interaction between the metal (in this case cast iron) with the coolant, metal base with defects and defect-free areas would not be identical, i.e. the pores are not originate from reaction (iron, anti-freeze, corrosion inhibitors), but they are probably result of non correct casting technology.

3. The metallographic analysis established the effects (fig. 7÷9), which are most likely the result of accidental, high-temperature oxidation of the cast iron (at over 250oC to about 500oC) [5, 6], which took place during the casting process. This gives us reason to conclude that the cooling jacket type part was destroyed as a result of a technological and not an operational defect.

5. References

1. http://www.splav-kharkov.com/z_mat_type.php
2. V. Anchev, *Physical metallurgy*, **part I**, Sofia, Technical University, (1990).
3. D. Krastev, B. Yordanov, R. Gavrilova, Kr. Klyavkov, V. Lazarova, *Laboratory workshop on metallurgy*, (2020), ISBN 978-954-465-108-4 9.
4. BSS 2734-83 Tensile/compression material testing.
5. BSS 5177-05 Defects in castings. Terminology and classification of defects, Sofia, (1986).
6. *Handbook of Metallurgy and Metal Processing by Plastic Deformation*, Acad. Marin Drinov, Union of Metallurgists in Bulgaria, (2009).
7. https://www.savree.com/en/encyclopedia/combustion-engine-cooling-water-system-jacket-water-system.
8. https://www.carparts.com/classroom/coolingsystem.htm.
9. https://www.howacarworks.com/basics/how-an-engine-cooling-system-works.
10. DIN 1695-81 Wear Resisting Cast Iron.
11. *Metallography and Microstructures*, ASM Handbook **Vol. 09**, Ed. G. V. Voort. ASM International, (2004).\
12. D. Krastev, B. Yordanov, *Metallography of parts defective during operation*, UCTM – Sofia, (2022), ISBN 978-954-465-145-9; ISBN 978-954-465-146-6 (e-book).

Self-Excited Acoustic System: enhancing quality control

Jan Przepióra[1,*], Michał Pietrzak[2]
AGH University of Science and Technology[1,2]
klalik@agh.edu.pl

Abstract: *This article discusses the use of self-excited acoustical systems (SAS) for the non-invasive and quick study of aluminium castings used in the automotive industry. The SAS system is incorporated into the industry 4.0 standard production line and provides valuable insights into the quality and reliability of the aluminium castings. This approach is innovative and aims to enhance the efficiency of the production process.*
Keywords*: ALUMINIUM CASTING,SELF-EXCITATION, QUALITY CONTROL, NON-DESTRUCITIVE, MICROSTRUCTURE*

1. Introduction

In the era of global trade and intercontinental shipping, ensuring the quality and reliability of industrial products has become paramount. This holds true for aluminum castings used as subassemblies in the automotive industry. These castings are subjected to various mechanical stresses, and any defects or inclusions can significantly compromise their structural integrity. Traditional examination methods, while effective, often require destructive or time-consuming procedures. To overcome these limitations, the integration of self-excited acoustical systems (SAS) into the industry 4.0 standard production line has emerged as a promising solution. This article explores the utilization of a SAS measurement stand for the quick and non-invasive study of aluminum castings, enabling manufacturers to enhance product quality and optimize performance.

The utilization of self-excited acoustical systems presents numerous advantages compared to conventional inclusion detection methods. One notable benefit is the ability to swiftly and accurately detect inclusions in real-time, without the need for additional equipment or external stimulation. This empowers manufacturers to promptly identify and address defects during the production process, minimizing the potential for costly delays and rework. Furthermore, self-excited acoustical systems excel in detecting inclusions that may go unnoticed by alternative techniques, such as X-ray imaging.

2. Principle of operation

The principle of operation behind self-excited acoustical systems (SAS) revolves around the autodyne effect.

The autodyne effect occurs when a speaker is brought close to a microphone, resulting in an undesired hum or feedback. In certain systems, such as radio technology, this effect has been utilized intentionally.[1] The autodyne effect refers to the phenomenon where a system becomes self-excited and sustains vibrations or oscillations due to the positive feedback loop created by the coupling of the emitter and receiver. This loop sustains and reinforces the vibrations within the casting, leading to self-excitation. By leveraging the autodyne effect, the SAS system achieves a continuous and self-sustained oscillation within the test element[1]–[5]. Similar effect can be achieved when the microphone is replaced by a accelerometer.

The SAS measurement stand consists of essential components such as a loudspeaker acting as the inductor, a piezoelectric accelerometer, a signal generator, a signal amplifier, a data acquisition card, and a signal conditioner as shown on Fig.1. The system begins by applying the loudspeaker, or vibration emitter, to the aluminum casting under investigation. By appropriately adjusting the amplifier gain, the autodyne effect leads to the excitation of vibrations within the test element, such as the aluminum casting.

Next, the piezoelectric accelerometer is strategically positioned in proximity to the studied measurement point on the casting, enabling the measurement of the resulting vibrations. The accelerometer operates on the principle of the piezoelectric effect, which involves the conversion of mechanical stress or strain into an electrical charge. This effect allows for the precise and sensitive measurement of vibrations in the casting.

The signal received by the accelerometer undergoes conditioning to ensure compatibility with the voltage levels required for further processing. Conditioning may involve amplification, filtering, or adjustment of the signal's amplitude and frequency range.[1]–[3], [6] Research has indicated that application of low-pass or bandpass filter allows the elimination of unnecessary frequencies that are not the test object's own frequency. The conditioned signal is then amplified and passed as positive coupling to the signal generator, completing the feedback loop necessary for self-excitation.

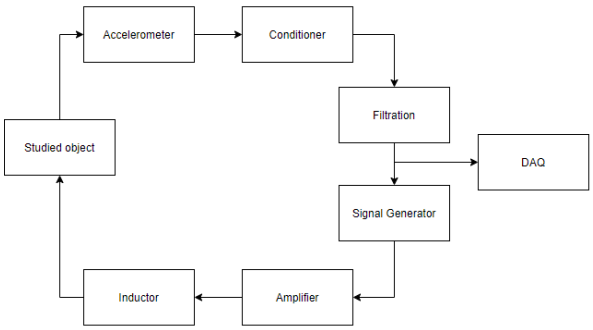

Fig. 1 Schematic diagram of the measurement system**.**

To facilitate analysis and interpretation, the conditioned and amplified signal is read by the data acquisition card (DAQ). The data acquired by the data acquisition card during the self-excited acoustical system (SAS) measurement process is processed using LabVIEW software. LabVIEW provides a powerful platform for data analysis and visualization, enabling efficient and effective evaluation of the acquired data.

One of the primary processing steps involves conducting a Fast Fourier Transform (FFT) on the acquired signal. The FFT algorithm converts the time-domain signal into the frequency domain, allowing for the identification of specific frequency components within the signal. In the context of the SAS system, the FFT analysis helps identify the highest peak in the power spectrum, which corresponds to the natural frequency of the studied object.

By identifying the highest frequency peak, the analysis aims to determine if the studied object exhibits any characteristic resonant behavior or if there are any anomalies associated with its natural frequency.[2], [3], [5]–[8] This information is crucial in assessing the integrity and quality of the object being studied. If the highest frequency peak aligns with the expected natural frequency, it suggests that the object is intact and meets the desired specifications. On the other hand, deviations or abnormal peaks indicate potential faults or defects within the object.

The analyzed data, including the frequency peak information, can be further processed and evaluated to make decisions regarding

the object's quality. This analysis can be customized based on specific criteria or thresholds set for determining the acceptability of the object. If the object is deemed faulty or exhibits irregularities, this information can be communicated to the control SCADA system (Supervisory Control and Data Acquisition) in real-time.

Integration with the control SCADA system allows for immediate actions to be taken based on the analysis results. The intact castings can proceed down the production line for further processing, while faulty objects can be promptly identified and discarded from the manufacturing processes. This seamless integration between the SAS system, LabVIEW software, and the control SCADA system ensures efficient quality control in the production line, minimizing the risk of defective components reaching the final stages of production.

3. Manufacturing line integration

To enhance the measurement process and enable full automation, the self-excited acoustical system (SAS) was mounted onto an industrial robot's arm using a specially designed gripper attachment (Fig.2). This innovative setup allows for the precise positioning and manipulation of the vibration emitter and accelerometer during measurements, offering increased flexibility and repeatability.

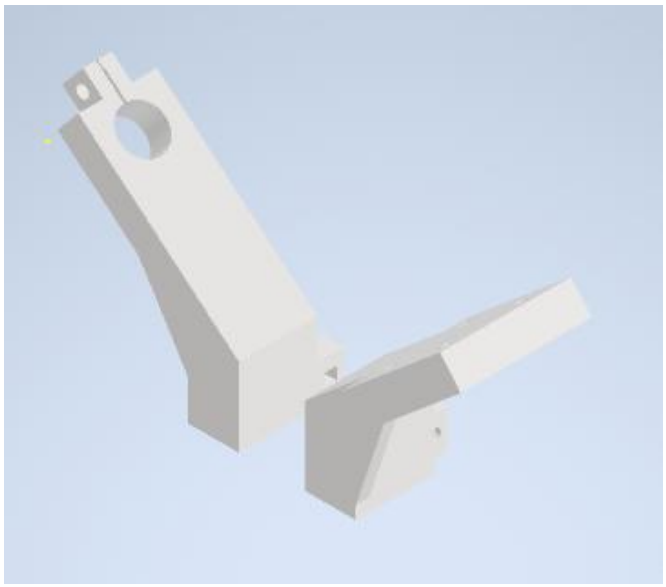

Fig. 2 Gripper attachment visualization

By integrating the SAS system with an industrial robot as shown on Fig. 3, the measurement process becomes more efficient and reliable. The gripper attachment securely holds the vibration emitter and accelerometer, ensuring their stable positioning and alignment with the studied object. This eliminates the potential for manual errors and inconsistencies that may occur when placing the components manually.

The industrial robot's arm provides controlled and precise movement, allowing for accurate and repeatable measurements even when the studied object is replaced. The robot arm can be programmed to follow predefined paths and execute specific motions, ensuring consistent application of the vibration emitter and accelerometer to the object's surface. This automation eliminates operator variability and enhances measurement precision.

Moreover, the incorporation of an industrial robot enables the measurement process to be seamlessly integrated into a larger production line or manufacturing environment. The robot arm can be synchronized with other process steps, such as conveyor systems or assembly stations, ensuring smooth and efficient operation. This integration enhances productivity, reduces manual labor, and allows for continuous and reliable measurements.

With the automated SAS system mounted on an industrial robot's arm, the measurement process becomes highly efficient, accurate, and repeatable. The precise control and movement provided by the robot arm, coupled with the specially designed gripper attachment, ensure consistent positioning and application of the vibration emitter and accelerometer. This eliminates variability, enhances measurement precision, and enables reliable assessments of the studied object's integrity.



Fig. 3 SAS system mounted onto robotic arm

4. Data analysis

To validate the measurement system and ensure its accuracy, four identically shaped aluminum casts were selected as the objects of study. Each casting was equipped with ten measurement points strategically placed on various sides of the cast. The study was conducted five times for each measurement point to ensure reliability and consistency of the results.

After acquiring the time domain signals from the measurements, Fast Fourier Transform (FFT) analysis was performed to identify the natural frequency peaks for each measurement point. By analyzing the frequency spectrum, the system was able to determine the resonant frequencies of the aluminum castings.

To assess the consistency and variability of the measurements, statistical analysis was conducted on the acquired data. For each measurement point, the average value of the natural frequency peak was calculated to represent the central tendency of the data. Additionally, the standard deviation was computed to quantify the dispersion or variability of the measured values around the mean.

The average value provides an estimation of the typical natural frequency for each measurement point, indicating the expected behavior of the aluminum casting. On the other hand, the standard deviation offers insights into the level of variation or uncertainty associated with the measured natural frequency values. This statistical analysis allows for a comprehensive evaluation of the measurement system's performance and the inherent variability within the studied objects. Results are shown in Table 1.

***Table 1**: Measured natural frequencies of studied objects*

	Cast 1	Cast 2	Cast 3	Cast 4
Point 1	5487,15± 0,8Hz	5931,76± 0,03Hz	5818,14± 0,05Hz	2068,37± 0,01Hz
Point 2	2083,56± 0,08Hz	5072,82± 3,63Hz	1878,49± 0,65Hz	5132,13± 10,41Hz
Point 3	2751,24± 0,66Hz	2362,4± 360,19Hz	2498,5± 48,19Hz	2535,17± 19,59Hz
Point 4	2842,49± 4,66Hz	2661± 23,52Hz	2629,33± 0,7Hz	2403,18± 49,28Hz
Point 5	2805,75± 2,57Hz	3147,9± 27,47Hz	5699,9± 0,06Hz	2469,48± 0,53Hz
Point 6	2799,1± 0,61Hz	1891,19± 0,6Hz	2647± 7,02Hz	2445,93± 11,22Hz
Point 7	3104,01± 0,49Hz	2593,59± 5,54Hz	1929,51± 0,43Hz	2389,56± 1,7Hz
Point 8	1928,34± 2,54Hz	1334,14± 7,33Hz	2611,61± 17,65Hz	2630,04± 27,93Hz
Point 9	3078,45± 18,63Hz	3128,8± 2,44Hz	2604,52± 2,47Hz	2524,45± 4,11Hz
Point 10	2978,68± 29,7Hz	2978,42± 29,71Hz	2544,79± 100,25Hz	2500,5± 18,88Hz

By calculating the average values and standard deviations for each measurement point, the data analysis provides valuable information about the consistency and repeatability of the measurements. These statistical metrics serve as indicators of the quality and reliability of the measured natural frequency peaks, contributing to the overall assessment of the integrity and characteristics of the aluminum castings.

5. Results

The results obtained from the analysis of the self-excited acoustical system (SAS) measurements provide valuable insights into the quality and integrity of the studied aluminum casts. It was observed that the natural frequency peaks varied among the corresponding points on different casts, suggesting potential casting imperfections or inconsistencies in the manufacturing process.

Some of the identified casting imperfections include variations in the composition of the casting material, uneven cooling rates, and the presence of inclusions or defects. These variations in natural frequency can be indicative of structural inconsistencies or localized areas of weakness within the castings.

Furthermore, the standard deviation values calculated for each measurement point offer an assessment of the reliability and consistency of the measured data. Higher standard deviation values indicate greater variability among the repeated measurements, which may suggest measurement uncertainty or inconsistent properties within the studied casts.

It is important to note that results with high standard deviation values should be interpreted with caution, as they may indicate measurement issues or inconsistent properties within the studied casts. Such results may require further investigation or additional measurements to ensure reliable and accurate assessment of the casting quality.

6. References

[1] J. Kwaśniewki, I. Dominik, and K. Lalik, "Application of self-oscillating system for stress measurement in metal," *J. Vibroengineering*, vol. 14, no. 1, 2012.

[2] I. Dominik, J. Kwasniewski, L. Krzysztof, and R. Dwornicka, "Preliminary signal filtering in Self-Excited Acoustical System for stress change measurement," in *Chinese Control Conference, CCC*, Oct. 2013, pp. 7505–7509.

[3] K. Lalik, I. Dominik, P. Ćwiąkała, and J. Kwaśniewski, "Integrated stress measurement system in tower crane mast," *Meas. J. Int. Meas. Confed.*, vol. 102, 2017, doi: 10.1016/j.measurement.2017.01.041.

[4] J. Kwaśniewki, I. Dominik, K. Lalik, and K. Holewa, "Influence of acoustoelastic coefficient on wave time of flight in stress measurement in piezoelectric self-excited system," *Mech. Syst. Signal Process.*, vol. 78, 2016, doi: 10.1016/j.ymssp.2016.02.035.

[5] J. Kwaśniewski, I. Dominik, J. Konieczny, K. Lalik, and A. Sakeb, "Application of self-excited acoustical system for stress changes measurement in sandstone bar," *J. Theor. Appl. Mech.*, vol. 49, no. 4, 2011.

[6] K. Skrzypkowski, W. Korzeniowski, K. Zagórski, I. Dominik, and K. Lalik, "Fast, non-destructive measurement of roof-bolt loads," *Stud. Geotech. Mech.*, vol. 41, no. 2, 2019, doi: 10.2478/sgem-2019-0013.

[7] K. Lalik and M. Kozek, "Cubic SVM neural classification algorithm for self-excited acoustical system," Jul. 2020, doi: 10.1109/MSM49833.2020.9201724.

[8] J. G. Kaufman and E. L. Rooy, "The Influence and Control of Porosity and Inclusions in Aluminum Castings," in *Aluminum Alloy Castings*, 2021.

Tools for calculating the emission of pollutants in transport

Aleksandar Manojlović[1,*], Snežana Kaplanović[1], Jelena Trifunović[2], Irena Milosavljević[2]
University of Belgrade Faculty of Transport and Traffic Engineering, Belgrade, Serbia[1]
Intico ltd, Belgrade, Serbia[2]
a.manojlovic@sf.bg.ac.rs

Abstract: *Increasing the volume of transport requirements increases the consumption of propellants and emissions of pollutants. Calculation and monitoring of pollutant emissions and energy consumption with the aim of reducing the negative impact on the environment and thus choosing the best transport route and means of transport for a particular transport task is a step towards a solution that can be applied to reduce emissions. The development of software tools for calculating energy consumption and pollutant emissions is conditioned by the precision of the defined methodology used for the calculation. This paper presents the possibilities of using tools for calculating pollutant emissions in transport.*
Keywords*: POLLUTANT EMISSION, ENERGY CONSUMPTION, TRANSPORT*

1. Introduction

In December 2019, The European Administration presented the "European Green Deal" – a new development strategy aimed at transforming the European Union into a fair and prosperous society, with a modern, resource-efficient and competitive economy, which will contribute to the total reduction of greenhouse gas emissions by 2050 and where economic growth is not linked to resource exploitation [1].

The European Green Deal predicts that Europe will become the first climate-neutral continent by 2050. Accordingly, concrete measures related to climate, energy, circular economy, construction, mobility, agriculture, sustainable food chains, biodiversity and pollution naturalization have been proposed accordingly. The first initiative covered by the Green Deal is the Fit for 55 package, which transposes the Ambitions of the Green Deal into legislation. It consists of a set of proposals to revise legislation in the fields of climate, energy and transport, and to introduce new legislative initiatives to align EU regulations with its climate objectives [2].

The Initiative for the Introduction of the Carbon Boarder Adjustment Mechanism (CBAM) is a key element of the European Union's package of instruments that will aim to reduce the risk of carbon „leakage“ stemming from the Union's greater climate ambitions. This will be achieved primarily by limiting the redistribution of EU-based industries to countries with less stringent climate regulations.

This mechanism is primarily oriented towards companies, not countries, because companies are the ones that are subject to cross-border adjustment only on the basis of their merits. In the first phase, it will apply to industries where a high risk of carbon leakage (high emissions and high levels of trade) is recognised, these are the industries of cement, iron and steel, aluminium, fertilizer and electricity, while later it is planned to be applied to other industries – primarily products of the chemical industry.

The CBAM will start rolling out as early as 2023, when it will start monitoring and reporting on actual carbon dioxide equivalent emissions. In this transitional phase, which will last until 2025, great work awaits both the state and manufacturers from these sectors. In the process of monitoring and reporting, the role of verifiers is important. From 2026, importers must declare the amount of embedded emissions in the total goods they have imported and then pay the CBAM liability or so-called adjustment [3].

Transport, which includes the transport of goods to the production plant, transport within the production unit itself, as well as the transport of the finished product to the final consumer (the same for services) has an extremely large impact on the carbon footprint of the product.. It is one of the factors of indirect emissions of greenhouse gases (which are generally far greater than direct ones).

It is common knowledge that the means of transport for propulsion are mostly used by fossil fuels. As the volume of transport requirements grows, so does the need for propulsion energy, which directly conditions the increase in emissions of harmful gases. Just because the world is not yet able to switch to using zero-emission vehicles, i.e. using only energy derived from renewable sources, it is necessary to find other solutions to reduce greenhouse gas emissions.

The use of modern software packages in order to monitor emissions of harmful gases by modes of transport depending on the transport route in order to choose the optimal solution is one of the solutions to the aforementioned problem.

Determining the methodology for calculating energy consumption and emissions of harmful gases by mode of transport is very important, because depending on the mode of transport, different parameters are taken for the calculation itself. In addition to the methodology for calculating energy consumption and emissions that occur during the exploitation of means of transport, it is very important to define the methodology for the calculation of emissions that occur in the process of production, processing and distribution of goods, because here, depending on the construction solutions of certain modes of transport, the methodology itself differs.

2. Limiting greenhouse gas emissions

Energy consumption and greenhouse gas emissions in freight transport activities can be reduced by two main groups of actors in the transport market [4]:

- shippers and logistics service providers arranging transport with carriers (foreign demand),
- carriers performing transport activities (foreign offers).

The groups of measures to reduce emissions of harmful gases that can be used are:

1. greater use of rail and water transport, from the demand side;
2. improving the planning of transport routes of means of transport, from the side and demand and supply;
3. improving the utilization of means of transport (reducing the number of rides without cargo, better use of cargo space), from the aspect of the offer;
4. improving the efficiency of the use of propellants (using low rolling resistance tyres, economical driving, choice of alternative propellants) on the offer side.
5. selection of alternative raw material suppliers / alternative customers (for industries) located in logistically better locations from the aspect of total cost, from the moment of more rigorous collection of total emissions to manufacturers and distributors of products.

Senders can directly influence the first measure by choosing the mode of transport. They can also encourage or oblige the carrier to apply the other three measures. In the end, senders can completely

change the raw material market and customers because it is expected that with the implementation of CBAM and other carbon footprint collection mechanisms, manufacturers will review the most profitable options for themselves, which can have a significant impact on the required routes to transporters [5].

The calculation of emissions of carbon dioxide and other components converted to the amount of carbon dioxide allows the establishment of a system of comparison of different transport systems that create greenhouse gases. Reporting such information can encourage a change in the behavior of senders and carriers.

With more widespread use of carbon dioxide emissions calculations for different types of activities, and when reported greenhouse gas emissions are assumed to be a realistic picture, senders can assess different modes of transport and carriers, as well as their emissions of carbon dioxide and other carbon-based components. In addition, determining the amount of carbon dioxide in transport services can provide an incentive for carriers to change their own behavior in order to reduce carbon dioxide emissions and outperform their competitors. Arguments for changing behavior may include the need to increase income, reduce costs, and limit risks (legal requirements and work permits), as well as care for the well-being of others.

Therefore, emissions of carbon dioxide and other carbon-based components is an instrument that targets the decision-making process of the transport contracting authority or transport intermediary when purchasing transport services and encourages carriers to improve their performance. This limits the efficiency of the instrument in two ways:

- emissions of carbon dioxide and other carbon-based components are generally effective when purchasing a transport service from another participant. In the freight transport market, the largest share of transported quantities is achieved by carriers working at the request of transport intermediaries;

- The efficiency of the use of calculations depends largely on the number of alternatives available and whether the sender gives importance to the performance of greenhouse gas emissions. Logically, carriers uninterested in greenhouse gas emissions are unlikely to change their behaviour, although they have the ability to compare different carbon dioxide emissions. However, for those interested in reducing the impact of greenhouse gas emissions, the availability of these alternatives is an important prerequisite to becoming energy efficient.

Calculating carbon dioxide emissions is one of the options available to improve the efficiency of greenhouse gas emissions generated in transport. However, the calculation of carbon dioxide emissions is not enough on its own; there are many other factors that lead to improved energy efficiency in passenger and freight traffic [6]. Therefore, information on ensuring energy efficiency is particularly effective when supported by other policies, such as standards or prices. For example, this has proven itself well with CO_2 labeling for cars and vans, which is also a means of providing information to consumers. Evaluation studies have shown that this instrument is particularly effective as an additional measure to other policies such as CO_2 standards for new cars and vehicles up to 3.5t of maximum permissible mass (both in perspective, potentially for heavy goods vehicles).

With these combinations, different standards provide incentives for manufacturers to improve the average fuel efficiency of new vehicles, while CO_2 labeling helps them identify vehicles with the highest fuel consumption, in order to provide incentives for consumers to include energy efficiency criteria when buying a car. According to a similar logic, providing information can also support the prices of certain legal regulations, such as, for example, differentiated vehicle tax. Standards and pricing measures have proven to be effective instruments for improving the energy efficiency of transport. Many other instruments can reduce greenhouse gas emissions from transport, such as green public procurement or sustainable procurement, infrastructure subsidies, speed policies, traffic management, etc. Openly providing information about such measures will increase consumers' awareness and ability to take greenhouse gas emissions into account when making decisions about choosing a mode of transport.

Carbon dioxide emissions from transport services can be seen as a complementary measure for the organisation of EU environmental initiatives: Product Environmental Footprint - POF and Organisation Environmental Footprint – OEF.

3. Approaches for calculating CO_2 emissions

There are more methodologies for calculating greenhouse gas emissions resulting from transport services, each with different levels of accuracy and detail. "Strategy for increasing energy efficiency in road transport" distinguishes three methods for transport carbon footprint calculations with different levels of accuracy, required data and possible changes [4]:

1. Basic emission factors according to the volume of transport (g/tkm)

Required data:
- Transport volume (tkm)
- Type of vehicle
- Basic values (g GHG/tkm) specific to the vehicle class

Possible changes:
- Change of mode of transport
- Reducing the volume of transport (tkm).

2. Basic emission factors of the vehicle (g/vkm)

Required data:
- Road travelled (km)
- Type of vehicle
- Vehicle load capacity (kg)
- Basic values of emission factors for each type of vehicle

Possible changes:
- Reduction of vehicle distance travelled (with cargo and without cargo)
- Change of mode of transport
- Increase the level of utilization of cargo space.

3. Measured energy consumption of the vehicle (l, kg, kWh)

Required data:
- Road travelled (km)
- Type of vehicle
- Measured energy consumption (MJ/km) of the appropriate type of vehicle with an appropriate degree of utilization of load capacity
- Quantity of cargo transported

Possible changes:
- Increasing the energy efficiency of vehicles
- Reduced fuel consumption
- Reduction of vehicle distance travelled (with cargo and without cargo)
- Change of mode of transport
- Increase the level of utilization of cargo space.

It is important to note that although a high level of precision and detail (Level 3) results in more reliable estimates of emissions of greenhouse gases, it also requires a significant amount of real data. So there is a trade-off between the accuracy of measurement methods and the simplicity of their use.

3.1. Basic emission factors according to the volume of transport – Level 1

Calculating greenhouse gas emissions based on emission factors is relatively simple and requires a limited set of data. Emissions for the transport service are calculated according to the following formula:

$$F = W \cdot D \cdot E$$

where is:
F - greenhouse gas emissions [g]
W - real mass of cargo [t]
D - the actual distance of transport [km]
E - specific emissions of greenhouse gases [g CO_2 eq./tkm].

When using this method, carriers and contracting authorities should provide information relating to their part of the work, i.e. to the distance of transport for a certain mass of cargo. Specific factors of greenhouse gas emissions are obtained from public or licensed databases or studies. The accuracy of the calculation depends on the quality of these databases.

3.2. 2. Basic emission factors of the vehicle – Level 2

The calculation of carbon dioxide emissions with vehicle emission factors also uses core values. However, while the Level 1 method uses one emission factor (g/tkm) per vehicle type, Level 2 calculation uses two (g/km of an empty vehicle and a g/km- loaded vehicle). This method requires more data than in the Level 1 Method, but also generates a more accurate result because it requires the degree of utilization of payload. The formula used with this method is as follows:

$$F_{vehicle} = D \cdot [(E_{max} - E_{empty}) \cdot W\% + E_{empty}]$$

where is:
$F_{vehicle}$ - greenhouse gas emissions from vehicles [g]
D - the actual distance of transport [km] (kilometers with cargo, empty kilometers)
E_{max} - specific greenhouse gas emissions of vehicles with full payload [g GHG/km]
E_{empty} - specific emissions of greenhouse gases of an empty vehicle [g GHG/km]
W% - The actual level of utilization of the vehicle's payload.

Normal values based on the vehicle's energy consumption (litre or MJ/km) instead of the vehicle's emission factor (in gCO2 per km) are considered correct. An example of a commonly used database for such emission factors for road vehicles is the Handbook for Road Transport Emission Factors (HBEFA).

3.3. Measured energy consumption of the vehicle (Level 3)

The third method uses the individual measured energy consumption of an individual vehicle. There are differences in the energy efficiency of different vehicles, which are also affected by the driving style of the driver. This method is quite accurate, given that the measured data that companies can collect is used. Unlike level 1 or 2 calculations, this method also includes measures to reduce GHG emissions by carriers. As such, this method encourages energy-efficient driving and the adoption of technology to reduce fuel consumption.

This method provides the most accurate calculation of CO_2 emissions, but also requires a large amount of data. In this case, the carbon dioxide footprint is calculated using the following formula:

$$F_{vehicle} = D \cdot G \cdot Q$$

where is:
$F_{vehicle}$ - vehicle greenhouse gas emissions [g]
D - the actual distance of transport [km] (with and without cargo),
G - specific power consumption (e.g. l/km or MJ/km),
Q - conversion factor (g GHG/l diesel).

The result of this formula results in the emission of harmful gases from the vehicle. These emissions can then be assigned to different shipments or cargo quantities. Since this method does not use the default emission factors, the carrier should collect data on the energy consumption of its vehicles. This can be achieved in two ways: by using data from on-board computers and processing data on the records of refuelling in vehicles.

4. The complexity of the calculation of the total emissions CO_2

There are several complex problems with calculating total CO2 emissions, especially when total emissions need to be distributed by type of services.

Calculating CO_2 emissions at the service level requires a specific allocation of emissions from vehicles (e.g. emissions per ride with cargo, per transport customer or per passenger), because only this approach can be useful for decision-makers when comparing the amount of CO_2 per type of service. Therefore, in the case of group transport, where multiple shipments are transported at once, the sender is not interested in the total emissions generated by this operation, but only in the emissions that can be assigned to his shipment. In the case of a relatively imprecise Level 1 approach, this is irrelevant, since the emission of gases is already expressed per unit of transport. However, if more accurate and reliable data is required, and carbon dioxide emissions are calculated with Level 2 or Level 3 methodology, greenhouse gas emissions will be determined at the level of the means of transport. In this case, the allocation of emissions to services or customers becomes an important and complex issue.

Likewise, sometimes it is necessary to distribute auxiliary and location processes and emissions by individual services.

There is a wide range of initiatives to determine the amount of carbon dioxide emitted into the transport and logistics markets. Looking at their type, purpose and variability, they can be divided into the following categories:

- standards for prescribing and/or harmonizing the CO_2 emission calculation methodology;
- programmes and other initiatives within the transport market to promote, support or harmonise the CO_2 emissions calculations;
- tools for calculating or comparing total CO_2 emissions in transport services.

The most important standards for the calculation of CO_2 emissions for transport services are:

- Standard EN 16258, developed by CEN, published in 2012

It is a European standard that provides a methodology for the calculation and declaration of energy consumption and greenhouse gas emissions of transport services (freight and passenger transport);

- Regulation 2011-1336, adopted by the Government of France, in 2011, with the beginning of application in 2013;

Regulations in France that oblige passenger and cargo transport providers to report greenhouse gas emissions. The regulation is based on EN 16258;

- Corporate value chain - standard of GHG protocol;

A standard for the calculation of greenhouse gas emissions developed by the Green House Gas Initiative, which is a multi-stakeholder partnership in the economic, non-governmental and administrative sectors led by the World Resource Institute (WRI) and the World Business Council for Sustainable Development (WBCSD).

In addition to standards and normative documents that were developed by standardization bodies and public institutions in the transport sector, the sector itself has also launched initiatives to support methods of calculating carbon dioxide. In order to use different methods in practice, it is necessary to determine the limitations, comparability of methods, transparency, credibility and usability.

5. Conclusion

The topic of energy efficiency, on the one hand, and the CO_2 emissions as the main greenhouse gas on the other, have resulted in a series of research aimed at finding the best solutions to

environmental challenges. In the field of transport, with the aim of reducing emissions, all factors that in any way have contact with vehicles from production to the end of the operational life of a motor vehicle are included.

It has been observed that at different stages of the exploitation cycle, i.e. the life cycle of a motor vehicle, its specific and overall fuel consumption can be affected in several ways. Therefore, it has been shown that, in addition to complex and expensive constructive vehicle systems, other, by nature and cost simple, measures and techniques can also make a significant contribution to the solution of energy efficiency problems.

It is very important to emphasize that a significant number of these measures do not require large financial resources for implementation, and it is necessary to promote them through various forms of education by introducing drivers to the reasons, ways of application and finally the benefits for them and the environment.

6. References

[1] European commission (2019) *European Green Deal COM/2019/640 final*, European Union, https://eur-lex.europa.eu/legal-content/EN/TXT/?uri=COM:2019:640:FIN (22.10.2022.)

[2] European Parliament, MEPs: *Put a carbon price on certain EU imports to raise global climate ambition*, European Union, https://www.europarl.europa.eu/news/en/press-room/20210304IPR99208/meps-put-a-carbon-price-on-certain-eu-imports-to-raise-global-climate-ambition (22.10.2022.)

[3] European Commission, *EU Emissions Trading System*, European Union, https://ec.europa.eu/clima/policies/ets_en (22.10.2022.)

[4] CE Delft,. (2014) *Fact-finding study in support of the development of an EU strategy for freight transport logistics*, Introduction of a standardized carbon footprint methodology, Delft, Netherlands

[5] IFUE; Öko-Institut; IVE/RMCON (2011) *Ecological Transport Information Tool for Worldwide Transports Environmental Methodology and Data*, Methodology and Data Update, Heidelberg: IFEU.

[6] EEA (2014) *TERM 2014: transport indicators racking progress towards environmental targets in Europe*, European Environment Agency, Copenhagen

Assessment of the risk of adverse events in aviation accidents

Leonid Vinogradov[1], Yulija Soldatova[2], Alekseij Nasibulin[3], Vladislav Turko[4],
Riga, Latvija[3, 4], Institute of Aeronautics[1.2] - of Riga Technical University, Latvija

Abstract: *The probability of flying safely in an adverse event situation is related to the probability of being hit and surviving it. Assessing the hazard of adverse events is an important task in aviation accident prevention. The correct quantitative determination of the potential danger of an event allows timely and targeted development of preventive measures: the introduction of new or improvement of old technology, training in actions under certain conditions, etc.*

KEYWORDS: *AIRCRAFT ACCIDENT, HAZARD ASSESSMENT, ADVERSE EVENTS, EMERGENCY SITUATION, ADVERSE EVENT RANKINGS, RANKING METHODS.*

1. Introduction

When investigating flight safety, relevant accident statistics include information on the number of fatalities in aircraft accidents, the especially in the passenger cabin. The probability of a passenger flying safely in an adverse flight event situation is related to the probability of the aircraft getting into an adverse situation and of the passenger surviving in this the incident Assessment of adverse event hazards is an important task in aviation accident prevention. Correct quantification of the potential danger of the event enables timely and targeted preventive measures to be developed: introduction of new or improvement of old technology and vehicle, aerodrome equipment and rescue equipment, training in certain accident conditions, assessment of passenger insurance premiums for different types of aircraft and destination aerodromes, etc. [1.2]

A hazard assessment indicates safety weaknesses in the aviation transport system. When reviewing statistical data, information for a given period is often compared with averaged data for a baseline period to determine trends in the level of safety. This method of analysis can also serve as a useful tool to investigate accident factors, especially in the case of fire incidents on a board of vehicle/

2. Tasks for ranking adverse events

The assessment of adverse events risk consists in ranking them according to the criteria adopted. This gives rise to the following ranking tasks:

1. selection of the hazard criteria on for adverse events;.

2. prioritizes the severity of any possible events that could lead to an aircraft accident (A.A.).

In practice, tasks 1 and 2 are often combined.

The main criterion to determinate the degree of hazard in practice is an indicator that shows the probability of an adverse event then turning into a mortal catastrophe case. This can be either the probability itself, derived statistically, or its derived value, usually obtained by methods of expert analysis.

The hazard is quantified according to the criterion adopted. In the case, if statistically reliable estimate cannot be obtained, the ranking task is to classified and prioritizing events according to their hazard.

3. Methods to rank adverse events

The selection of ranking methods is based on to state an adverse event hazard criterion as the probability then an event turning into an aircraft crash with mortal cases. [1]

There are two main ways of determining the probability of aircrash occurring:

- statistical methods;
- expert judgement methods;

The first method allows us to obtain a reliable estimate especially if a sufficiently large amount of statistical material is available.

The expert method does not have this disadvantage, but in turn carries an element of subjectivity and depends on the examination procedure**.**

4. Methods of Expert Estimation

The methods of expert evaluation allow us to use the experience of flight experienced specialists, when ranking adverse situations. In contrast to the statistical one, it also reflects the expert's attitude to a given type of event, which, based on extensive experience, can provide additional information about the degree of danger of the event. However, in this case there appears subjectivism in evaluation. To reduce it different methods are used. [3] In particular the rank of hazards can be determined in two stages.

At the first stage, the ranks of hazards for categories of events are determined according to statistics.

At the second stage, the ranks of the events themselves (their affects) are determined on the basis of expert evaluation.

The most widespread are methods of expertise based on the assessment of their degree of reliability. The ranking of hazards is performed with an assessment of the competence of experts and with an indication of the degree of consistency (concordance) of the results.

Let us dwell on them in more detail and consider a step-by-step ranking method .

5. Assessment of adverse Events

For each category of adverse events according to the Pi probability of their change to a catastrophe. At the second stage, each category of events from the selected list is assigned its own weight Gj according to the assessed severity, based on the expert survey. [2] The rank of hazards is determined by the value Pi Gj , and the final assessment of the hazard level of events is made for each type of aircraft by the formula

$$P_k = \sum_{i=1}^{m} \sum_{j=1}^{l} P_i^k G_j^k n_{ij}^k,$$

1 Stage

P_i- a probability of adverse events that can to change into a catastrophe,

assigned its own weight Gj according to the assessed severity, based on the expert survey [/ The total rank of hazards is determined by the value Pi Gj , and the final assessment of the hazard level of events is made for each type of aircraft by the formula

2 Stage

1. Each category of adverse events is evaluated by the degree of severity, by introducing a relative weighting coefficient Yi

2. Then the rank of danger is Pi Yi

3. Adverse event hazard level (for each type of aircraft, part, aerodrome, technical service, resque operators etc.)

$$P_k = \sum_{i=1}^{m} \sum_{j=1}^{l} P_i^k y_j^k n_{ij}^k,$$

where Pi is the probability of change of the i-th group of events into a catastrophe for the k-th type of aircraft;
mk - number of groups of events (here m=4);
Ykj - weight (rank) of the j-th event type for the c-th aircraft type;
n_{ij}^k - number of event types.

The distribution of adverse events is presented in the form of a matrix

Tab.1.

	1	…	j	...	l	Total
1	n_{11}	...	n_{1j}	...	n_1l	n_1
…						...
i						n_i
...						
m	n_{m1}		n_{mj}		n_{ml}	n_m
Total	n^1	...	n^j	...	n^l	n

Each column indicates the number of adverse events belonging to the appropriate group and type of event [2]. The matrix is compiled with respect to each type of aircraft

Summary

The total score for all types of aircraft is given by the expression

$$R = \sum_{k=1}^{s} R_k \ ,$$

where S- the number of aircraft kinds.

To account for the productivity of activities of airlines, it is possible to use a relative indicator of their activity ,

$$K = R/L$$

where L – the parameter of activity (flight hours, endurance time, number of flights etc.

The probabilities Pi are defined as the ratio of the number of catastrophes to the number of adverse events for the i-th group.

$$P_i = N_k/N_i \ ,$$

where $N_к$ –the number of catastrophe;
N_i-the number of adverse events

Summary

The statistics for Nik is chosen for the period of time immediately preceding the analyzed one, taking into account the obtaining of statistically reliable estimates. When calculating R, the values Pi are taken constant. Determination of Gj weights is performed by the expert survey method. For this purpose, a questionnaire containing a list of the main types of adverse events encountered in practice is prepared and distributed to experts from among the flight instructors. The scores are given on a point scale. The averaged data for each type of aircraft and represent the required weights...

Literature

1. В. З. Шестаков, З. Т. Крохин, Ф. И. Скрипкин «Инжинерно-организационные основы обеспечения безопасности полётов в гражданской авиации.» М.: Транспорт, 1990. - 275 с.
2. Р. В. Сакач, Б. В. Зубков, М. Ф. Давиденко и др. « Безопасность полётов.» Под ред. Р. В. Сакача. – М.: Транспорт, 1989. - 239 с.
3. Техническая информация (обзоры, рефераты по материалам иностранной печати). «Авиационные происшествия с гражданскими самолётами в 1989-1999г.» Серия «Авиационная и ракетная техника», вып.2 (1756), март-апрель (2000), с 1-63

Different aspects influencing modal split, from view of sustainable development and reducing of greenhouse gas emissions

David Juřík, Vít Janoš
Czech Technical University in Prague, Faculty of Transportation Sciences
Email: jurikda1@fd.cvut.cz, janos@fd.cvut.cz

Abstract: *This paper focuses on actual knowledge of the effects of changes in infrastructure on modal split of different transport modes, as well as on knowledge of long-term evolution of modal split in areas with dynamic development of transport systems. Further it focuses on studies on relations between modal split and greenhouse emissions and on studies on social factors influencing travel behaviour. Important part of this article are summarisations of articles about changes of travel behaviour of inhabitants of locations, where was opened new transport infrastructure, with focus on new infrastructure intended for public transport.*
KEYWORDS: *MODAL SPLIT, TRANSPORT INFRASTRUCTURE, PUBLIC TRANSPORT, GREENHOUSE GASES, POLLUTION, SOCIAL FACTORS*

1. Introduction

This paper is summarisation of articles focused on different aspects, that influence travel behaviour of inhabitants of various areas around the world. Changes of this travel behaviour led to changes in so called modal split of transport modes. The modal split is the share of certain transport mode on overall transport work. Modal shift is then understood as the change in modal split.

It is important to have knowledge about factors leading to modal shifts, because nowadays are trending topics as is increasing of modal split of public transport, walking and cycling. These modal shifts are currently very desired, because the decrease of usage of individual car and motorcycle transport can lead to reduction of greenhouse gas emissions. Transport is one of the main sources of greenhouse gas emissions. The greenhouse gas emissions are the reason of global warming, which is unwholesome effect. Global warming can damage many ecosystems around the world, as well as it can negatively affect the environment in which people live. Other reasons for reducing share of individual transport modes are freeing space in city streets, occupied by parking cars, as well as reducing congestions.

In recent years, many countries committed to reducing greenhouse gas emissions. Very important is The Green Deal, the agreement of European Union countries. Under this agreement, Europe should become the first climate neutral continent. This should be reached by reducing greenhouse gas emissions levels by 55% in year 2050 in comparison to year 1990. The way to achieve the goals of this agreement is developing electromobility, in the field of individual transport, as well as in the field of public transport. Development of individual electromobility can lead to reduce of emissions, but development of public transport can also reduce congestions and free space, especially in big cities.

Another reason to study different factors influencing modal split of transport modes is the need to determine, which moves can lead to modal shifts. Great amounts of financial costs are nowadays invested in many transport construction, but not all of them lead to improvement of traffic in particular area.

2. Methods

Articles focusing on modal shifts use many types of methods. The most important are Stated Preference Surveys and Revealed Preference Surveys. Some articles also use linear programming or transport modelling.

In Stated Preference Surveys, potential riders are asked what would make them change their mode of travel. The disadvantage of these surveys is that the truth of the answers is not guaranteed. To gain representative answers, the large number of respondents is needed.

Another important method is Revealed Preference (RP) surveys. Here, data on the actual numbers of passengers on the means of transport are used. By comparing passenger numbers before and after a change in transport infrastructure, it is possible to get a more accurate picture of the impact of that change. The disadvantage of this method is that the impact of a transport measure is only assessed after it has been put into operation.

SP and RP surveys are often combined to make use of advantages of both, and to minimize their disadvantages.

Linear programming is used to find optimal value of objective of function limited by constraints. It can be used to determine, which modal split of different transport modes is optimal from view of both financial costs and environmental impacts.

Transport modelling is way to determine impacts of traffic changes. It should be used during the process of decision making about the transport structures. It shows impacts on public and individual transport without need to invest funds to create the new structure.

3. Results and discussion

As for the literature on infrastructure changes and related changes in modal split, it has been divided into several groups for the purposes of this paper.

3.1. Articles dealing with the building of infrastructure and the related modal shift in favour of public, cycling or walking transport

In this section, articles related to the effects of infrastructure construction on modal split are discussed. There are not many articles dealing with changes in the division of transport work after the commissioning of new transport infrastructure, not least because the construction of a major transport structure is needed to carry out such research.

The first paper [1] focuses on Bus Rapid Transit (BRT), i.e. buses in dedicated lanes. This mode of transport has been developing a lot recently, especially in Asia. Compared to rail transport, it has the advantage of lower system construction costs and is also more flexible. As part of this work, a survey was conducted among the residents of Khon Kaen City, Thailand. There are many people using cars and motorcycles for transportation in this city. A Stated Preference survey was used just among the users of these individual means of transport. The research focused on the willingness to change the means of transport in response to different bus travel times and fares, as well as the increasing price of private means of transport, the increasing travel times by private means of transport, and the combination of decreasing bus travel times with increasing private means of transport prices.

Among the findings of this survey are that if BRT travel times and fares were the same as existing public transport, 25% of car users and 30% of motorcycle users would switch to BRT. These high numbers are since survey respondents live along the planned BRT route. The main reason for the change for these users is that the new BRT buses are supposed to be air-conditioned and more comfortable than existing buses. As bus fares decrease, and bus travel times decrease, the number of car and motorcycle users who would be willing to change their mode of transportation increases. For motorcycle users, the percentage of people who would be willing to change mode is higher than that of car users. According to the survey, travel time is particularly important for people who currently use a car. In contrast, the cost of travel is more important to motorcycle users. In addition to reducing public transport travel times and fares, charging for road use and parking is recommended to achieve a higher public transport mode share.

The second paper [2] also focuses on BRT. The relationship between BRT and transit-oriented development (TOD) is examined. TOD is a mode of land development induced by and relying on one or more rapid transit systems. This paper examines the potential problems perceived by BRT riders when changing their means of transportation. Findings from various other articles dealing with BRT are summarized.

Following paper [3] focuses on the question of whether the construction of new infrastructure for walking and cycling leads to a shift of passengers from cars to these modes. The city of Cambridge was used for the research, where a new road was opened with a pedestrian and cycle path. Questionnaires were used to investigate how the mode of travel to work has changed since the opening of the path compared to before the path opened.

Only a small proportion of respondents had completely changed their habits, with a partial change towards active modes of transport being more common. Most respondents showed highly variable transport behaviour. The research revealed a wide variety of changes in transport behaviour, with changes in infrastructure not leading to one type of change in respondents' behaviour.

Study [4] examines the changes in transport behaviour of residents around the new metro line in Mumbai. Revealed Preference (RP) and Stated Preference (SP) survey data were used to determine econometric models of mode choice. It combines these two types of surveys to exploit their strengths and minimize their weaknesses.

The RP survey was conducted among passengers using the new metro line. The RP survey collected information about the social status of the users of the new metro line, details about the old way of travelling to work before the metro line was put into operation and the new way of travelling. The SP survey was conducted among users of the road running parallel to the new metro line. Questions on the social status of participants, their usual mode of transport to work and questions on which mode of transport the interviewee would prefer depending on waiting time for the connection, travel time, comfort, cost of transport number of transfers, were included.

The research was designed to realistically determine the value of travel time. According to the survey, approximately half of individual car users will not change their mode of transport, while a quarter are very likely to change their mode of transport. The remainder may or may not change their behaviour.

According to these studies, it appears that the construction of new transport infrastructure for public or cycling transport does not automatically lead to an increase in the share of sustainable transport. Especially for people using cars, public transport is often not very attractive even if it is significantly improved. The main users of newly built infrastructure remain people who were already using public transport.

3.2. Articles dealing with the evolution of the modal split in a particular area, which is influenced by various factors

In this part of the paper, studies looking at the long-term evolution of mode shares in a particular area, be it a city or an entire state are focused.

The first study [5] deals with the competitiveness of rail transport compared to bus and individual car transport on various routes within the Czech Republic. According to this study, the modal split is determined by several groups of factors. The first group includes the characteristics of the transport participant itself, such as family status, access to a private car, ownership of a driving licence, income and type of employment. The second group includes factors related to the trip itself, such as the reason for the trip and the time at which the trip takes place. The third group includes quantitative and qualitative characteristics. Quantitative characteristics are, for instance, travel time, cost of travel, availability and cost of parking, if applicable. Qualitative characteristics include factors that are difficult to measure, such as convenience, safety or reliability.

In the Czech Republic, regular yearbooks are published on traffic volumes by mode. However, these yearbooks do not contain information on the directions or purposes of these journeys. The only source of information on these parameters is the results of the Census of Population, Houses and Flats. However, this takes place only once every ten years, and the results are released with a delay. In this study, the modal split is therefore modelled using discrete choice theory, specifically a nested logit model.

The study itself evaluates the relationship between Prague or Brno and other cities or regions in the Czech Republic. According to the model, there was an increase in the share of individual car transport between 2001 and 2011, with a more pronounced increase between 2006 and 2011. In this model, due to the time constraint of 2011, the effects of, for example, the entry of private carriers on the Prague - Olomouc/Ostrava rail link have not been hidden. The highest shares of public transport were recorded on routes along rail corridors or on routes with sufficient supply of connections by both modes of public transport.

The development of transport infrastructure and the related growth of urban development and population is the subject of this study [6]. It traces the development of Jeddah city in Saudi Arabia from 1964 to 2007. It mainly uses aerial and satellite imagery to study the development of the city and its transportation infrastructure. Using the se data sources, the evolution of the built-up area of the city, changes in land use, population density or the density of the transport network are mapped.

Data from traffic studies are also used. Based on these data, the number of intra-city trips in relation to the area of the city or the development of modal split in the city are mapped. These data show a significant increase in the use of private cars in this city: from 50 per cent of this mode in 1970 to 93 per cent in 2007. In contrast, the share of public transport has fallen dramatically: from 19 percent in 1970 to 2.3 percent in 2007. Other modes of transport, such as walking and cycling, have similarly declined.

The authors of this study put this development in the context of the development of the city's transport infrastructure and the increase in its area and population. Another factor that has influenced this development is the city's transport policy, which has promoted the use of individual car transport, but not the development and use of

public transport. The study focuses mainly on the relationship between the increase in the size and population of the city and the development of transport infrastructure, without addressing socio-demographic characteristics that also influence the use of different modes of transport.

The following article [7] concerns the implementation and evaluation of a Revealed Preference transport survey in the area between Lovosice and Most. The results of this survey showed that the share of passengers on public transport depends to a large extent on how attractively a bus stop is located. Furthermore, the limitations of the classic car survey are mentioned, where the exact starting and finishing stop of the passenger is unknown.

The article [8] describes high-speed rail systems in various European countries, namely Austria, Germany, Benelux, France, Italy and Spain. Due to their short travel times, even shorter than those of cars even in terms of door-to-door connections, HS lines can lead to significant changes in modal split. Geographical conditions are identified as a major factor influencing the shape of the high-speed rail system, but also the operational concept. In countries with a dominant centre, radial lines are run, with timetables adapted to demand. In contrast, a higher degree of regularity can be observed in networked systems.

In the article [9] the authors deal with different variants of operational concepts on suburban lines. An efficient operating concept is important in order to attract as many passengers as possible and thus increase the modal split of public transport. The line from Prague to Benešov was used as a case study. Three approaches are compared: one-level service, combination of stopping and semi-fast train and zone-oriented timetable. These options are compared in terms of travel times to Prague and the number of train sets needed. The zone-oriented timetable, which requires more train sets but still performs better than the one-level service, comes out best in the comparison of travel times.

The possibilities of introducing a regular timetable in Central Eastern Europe in the period after the collapse of the socialist bloc are dealt with in the book chapter [10]. A punctual timetable is important because of its higher attractiveness for passengers and therefore higher modal split, as well as from an operational point of view. The introduction of the timetable in the Czech Republic is also the subject of an article [11]. Previously, the timetable on railways in the Czech Republic was demand driven. Gradually, the tact timetable was introduced, initially on long-distance lines. For further development of the integral timetable in the Czech Republic it is necessary to harmonize its requirements with new infrastructure measures.

As these articles show, in the long run, the share of public transport in the division of transport labour is declining. If public transport is not supported at all, the decline is very significant; if there is at least some support, the decline is more moderate. In any case, the decline in interest in sustainable transport is a frequent phenomenon. To increase interest in public transport, more support for this mode would be needed, but this is rather exceptional.

3.3. An article dealing with modal shift from the perspective of social practice theory

In the third section, an article dealing with changes in people's transport behaviour from a sociological point of view is mentioned. Transport experts often forget about the sociological influences on the choice of means of transport, but these influences are very important in people's decision-making. The article [12] uses the example of two English cities to describe the obstacles facing efforts to increase the share of environmentally friendly modes of transport such as bus and cycling. The social background of individuals often causes resistance to these modes of transport. It is therefore important not to forget the social dimension in campaigns to promote these modes of transport. It is also important to tailor education and healthcare provision to promote these modes of transport. An integrated approach in policies is important, emphasising the importance of the use of these modes of transport in relation to the present day. There is also a need to use new and more radical forms of campaigning to promote green transport.

3.4. Articles dealing with the links between building public transport infrastructure, the resulting modal shift and reducing CO2 emissions or transport costs

Many studies look at reducing CO_2 emissions for only one transport mode. There are also studies that examine multiple transport modes simultaneously. This study [13] also deals with the quantitative evaluation of modal shifts between transport modes and the building of infrastructure measures.

An advanced mathematical programming model to minimize transportation costs is developed within the study area. In this model, among other things, the maximum modal shift rate is constrained. Costs for infrastructure construction, new vehicle acquisition, or maximum vehicle loads are also accounted for. The maximum CO_2 production is also limited.

It uses mainland China as a case study. The results show a gradual decline in the share of petroleum-powered vehicles in all modes of transport. In contrast, the share of vessels powered by natural gas is increasing in waterborne transport. The share of electric and hydrogen powered vehicles is increasing, although the share of diesel-powered vessels remains higher in waterborne transport due to the high prices of these environmentally friendly propulsion modes. Due to the high cost of building metro lines, buses are used extensively in public transport.

As for CO_2 emissions, these need to start reducing immediately for freight transport, while passenger transport is experiencing a temporary increase.

The International Energy Association (IEA) has collected a large amount of data on the modes of transport used by passengers in passenger transport around the world. It has also developed a mobility model (MoMo), which is built in Excel and calculates a number of transport indicators, energy consumption, pollutant emissions and greenhouse gas emissions. MoMo is not an optimization model but is embedded in an optimization framework.

In this study [14], this model is used for "what-if" scenarios, modelling the amount of emissions in the event of a change in the behaviour of transport users. A new module has been developed, modelling GHG emissions and energy consumption from modal shifting. The study deals with so-called BLUE Shifts, i.e. situations where the modal split of transport work changes towards greener transport modes. Furthermore, in this scenario, overall less commuting is foreseen in connection with better land-use planning. BLUE Shift is then compared to a situation without a change in the division of transport labour towards greener transport modes.

Other articles dealing with this topic include [15], which discusses different ways to reduce emissions in Lille, France. These ways include not only a carbon tax, but also indirect ways of reducing emissions, such as tolls or paying for parking.

Carsharing and its impacts on greenhouse gas emissions are addressed in a study [16]. It looks at how carsharing has changed

the behaviour of its users compared to before they started using it. The survey was conducted in eleven European cities. Some users have sold their personal car or postponed the purchase of a new one. This has freed up some space on city streets, but the results varied from city to city.

There are also many articles dealing with modal shift and the associated reduction of greenhouse gas emissions in freight transport. However, I have not listed these articles here because I am primarily concerned with passenger transport in this text.

4. Conclusion

Due to impacts of greenhouse gas emissions, it is important to support means of transport, that do not impact environment so heavily. The more environmentally friendly transport modes, as are public transport, walking and cycling, should be promoted. These transport modes usually are not as comfortable and fast as individual transport, so it is important to persuade people to use them by making them cheaper and more fashionable.

It is very important not only put in operation new infrastructure for these sustainable transport modes, but also to convince people to use it. Especially in poorer countries is very important the social status. The people using cars are considered to be of higher status than people making their trips by public transport or by bicycle. It is important to change the bad reputation of sustainable means of transport, because otherwise it is not possible to increase the usage of them.

The results of many surveys show that most of the users of new travelling infrastructure for public transport are the people, who already used public transport before the new infrastructure was put in operation. There are not many new riders, which can be explained by habits, which are difficult to change. With introducing new public transport infrastructure, some new users of public transport are gained, but usually it lasts longer time to persuade people to change their habits. Another problem is that people in Stated Preference surveys sometimes do not tell the truth about their real transport habits. Some people try to look more caring about the environment, so they tell that they would switch to public transport, if it were faster or more comfortable, even though it is not true.

The situation is similar for cycling and walking. These means of transport can be used for shorter distances, because they are physically hard. Not everybody can use these ways of transport, as the people using them need to be in good shape. On the other way, cycling or walking can improve the physical condition of people and make them healthier.

Longer travelling times are the main disadvantages of sustainable transport modes. People using cars usually put emphasis on their time, because they are busy, and they do not want to spend time doing unimportant activities. Therefore, it is crucial to make public transport competitive in the means of travel times. Possibility to work during commuting can also attract more people to public transport, so it is important to have possibility to use not overcrowded vehicles. Because of these people should, for instance, trains have first class sections.

Without promotion, the modal split of sustainable transport modes will decrease. The individual electromobility can reduce greenhouse gases as well as usage of public transport, but it will not lead to freeing of space in cities and reducing congestions.

5. References

[1] Satiennam, T., Jaensirisak, S., Satiennam, W., & Detdamrong, S., Potential for modal shift by passenger car and motorcycle users towards Bus Rapid Transit (BRT) in an Asian developing city. *IATSS research*, *39*(2), 121-129. (2016)

[2] Prayogi, L., & Satwikasari, A. F., Bus Rapid Transit-oriented Development: An Identification of Bus Rapid Transit System Passengers' Modal Shift Potential Considerations. *CSID Journal of Infrastructure Development*, *2*(1), 127-136. (2019)

[3] Heinen, E., Harshfield, A., Panter, J., Mackett, R., & Ogilvie, D., Does exposure to new transport infrastructure result in modal shifts? Patterns of change in commute mode choices in a four-year quasi-experimental cohort study. *Journal of Transport & Health*, *6*, 396-410. (2017)

[4] Sohoni, A. V., Thomas, M., & Rao, K. K., Mode shift behavior of commuters due to the introduction of new rail transit mode. *Transportation research procedia*, *25*, 2603-2618. (2017)

[5] Chmelík, J., Assessments of modal split in long-distance passenger transport. *Review of Economic Perspectives*, *15*(1), 49-69. (2015)

[6] Aljoufie, M., Zuidgeest, M., Brussel, M., & van Maarseveen, M., Spatial–temporal analysis of urban growth and transportation in Jeddah City, Saudi Arabia. *Cities*, *31*, 57-68. (2013)

[7] Metelka, S., & Janoš, V., Demand variation in regional transport. In *2021 Smart City Symposium Prague (SCSP)* (pp. 1-5). IEEE. (2021, May)

[8] Drábek, M., Mazel, D., & Pospíšil, J., High-speed rail network and periodic timetable: a comparative analysis of operational concepts. *Acta Polytechnica CTU Proceedings*, *31*, 5-9. (2021)

[9] Vávra, R., & Janoš, V., Comparison of Different Conceptions of Suburban Railway Transport. In *2019 Smart City Symposium Prague (SCSP)* (pp. 1-5). IEEE. (2019, May)

[10] Borza, V., Janoš, V., Neumann, I., 'More is Less': Regular Interval Timetable in Central Eastern Europe. *Roth, R., Jacolin, H.: Eastern European railways in transition: Nineteenth to twentyfirst centuries. UK: Ashgate Publishing Limited*, 327-342, (2013)

[11] Janoš, V., & Baudyš, K., Development Of Periodic Timetable In The Czech Republic., *Road and Rail Infrastructure II*. (2017)

[12] Cass, N., & Faulconbridge, J., Commuting practices: New insights into modal shift from theories of social practice. *Transport policy*, *45*, 1-14. (2016)

[13] Li, C., Liu, P., & Li, Z., A Long-Term Decarbonisation Modelling and Optimisation Approach for Transport Sector Planning Considering Modal Shift and Infrastructure Construction: A Case Study of China. *Processes*, *10*(7), 1371. (2022)

[14] Cuenot, F., Fulton, L., & Staub, J., The prospect for modal shifts in passenger transport worldwide and impacts on energy use and CO2. *Energy Policy*, *41*, 98-106. (2012)

[15] Hammadou, H., & Papaix, C., Policy packages for modal shift and CO2 reduction in Lille, France. *Transportation Research Part D: Transport and Environment*, *38*, 105-116. (2015)

[16] Fromm, H., Ewald, L., Frankenhauser, D., Ensslen, A., & Jochem, P., *A study on free-floating carsharing in Europe: Impacts of car2go and DriveNow on modal shift, vehicle ownership, vehicle kilometers traveled, and CO2 emissions in 11 European cities* (No. 36). Working Paper Series in Production and Energy. (2019)

Analysis of pedestrian road safety in the Republic of Croatia

Tomislav Kučinić[a], Marijan Rajsman[b], Andrej Kunštek[c], Želimir Velić[d]
Faculty of Transport and Traffic Science, Zagreb, Croatia [a, b, c, d],
tkucinic@fpz.hr[a], mrajsman@fpz.hr[b], akunstek@fpz.hr[c,] zvelic@fpz.hr[d]

Abstract: *Pedestrians are a special category of road traffic participants. The special feature of pedestrian traffic is that it is accessible to everyone, regardless of age or knowledge of traffic. Pedestrians do not usually wear protective clothing and have a low and vulnerable position on the road compared to other road users. In road accidents involving pedestrians, 96% of those involved were injured due to inadequate pedestrian protection. Pedestrians are responsible for about 20% of all road traffic fatalities, although the proportion of road accidents involving pedestrians is only 4%. This shows that pedestrians are an extremely vulnerable group of participants. Therefore, this paper presents an analysis of all traffic accidents involving pedestrians in a five-year period in the Republic of Croatia. It is analysed in which locations and for what reasons traffic accidents occur in which pedestrians suffer fatal consequences. The analysis is conducted so that the micro-locations where pedestrian accidents occur can be further investigated.*
Keywords*: PEDESTRIAN COLLISION, TREFFIC ACCIDENTS, CRASH TEST, PC CRASH, PEDESTRIAN*

1. Introduction

Traffic accidents are one of the leading causes of death in the world. If we analyse the number of fatalities in traffic accidents, 20% of them are pedestrians. As pedestrians are the most vulnerable traffic users, a significant portion of pedestrian accidents results in injury or death.

Pedestrian travel is the most accessible form of transportation because there are no age restrictions or acquired knowledge and skills.

The paper contains statistical data on road traffic accidents in the Republic of Croatia for the observed period of five years. Data on pedestrian injuries in the countries of the European Union and data on pedestrian injuries in the Republic of Croatia are also presented.

2. Pedestrian road safety in European Union countries

One of the most vulnerable groups on the road are pedestrians. From 2010 to 2018, there were 280,000 seriously injured pedestrians in the European Union, while 51,000 pedestrians were killed. From 2010 to 2018, the number of pedestrian fatalities decreased by about 2.6% each year. In 2019, 4,628 pedestrians died in road accidents on the territory of the European Union, representing 20% of all persons killed in road accidents. In 2020, 3,608 pedestrians died in traffic accidents in the European Union, representing approximately 19% of all those killed in traffic accidents.(1) Among the European Union countries, the number of pedestrians killed in traffic accidents is highest in Romania. In countries such as Romania, Latvia and Lithuania, the number of pedestrians killed in traffic accidents is twice the average of the other countries of the European Union. Romania has 34.4 pedestrians killed per million inhabitants, the Republic of Croatia is above average with 13.4 pedestrians killed per million inhabitants, and the Netherlands has the lowest number with 2.6 pedestrians killed per million inhabitants. Looking at European Union countries, the average number of pedestrians killed on the roads in 2018-2020 is 9.7 pedestrians per million inhabitants. The trend in pedestrian fatalities in the EU is currently downward. From 2011 to 2020, the number of pedestrian fatalities decreased from 5,986 to 3,608, a relative decrease of about 40%. The decrease for pedestrians is more significant than the decrease for all other road users, which is about 34% over the same period. (2) All European Union countries have seen a decrease in pedestrian fatalities except Cyprus, which has seen an increase of about 10%. In Hungary and Bulgaria, the number of fatal pedestrian accidents decreased the least during the observation period, while Estonia recorded the largest decrease of 53%. In the Republic of Croatia, the trend in pedestrian fatalities between 2011 and 2013 is 23% compared to 2018-2020. Looking at the gender of traffic fatalities in EU countries, 78% are men and 22% are women. For pedestrian fatalities, the ratio is slightly different: 64% of pedestrian fatalities are men and 36% are women. In the Republic of Croatia, in the period from 2012 to 2020, 79% of persons killed in traffic accidents were men, and in pedestrian accidents, 59% of pedestrians killed were men. 48% of pedestrians killed are over 65 years old, of all road users killed, 28% are over 65 years old, while the largest proportion of those killed, 56%, are between 25 and 64 years old. Most pedestrians killed are over 65 years old, and 21% of the population in EU countries is over 65 years old. Most traffic accidents in which pedestrians are killed occur during the day on weekdays 64%, weekends during the day 18%, weekends at night 10% and weekdays at night 8%. If the above date is a correlated with the participants killed in traffic accidents, the ratios are different, but the distribution is the same. 53% of participants killed in traffic accidents were killed on non-urban roads, 40% on urban roads, and 8% on expressways and highways. Fatal pedestrian crashes occurred 5% on expressways and highways, 24% on nonurban roads, and most fatal pedestrian accidents occurred on urban roads 71% of all fatal pedestrian fatalities. In 2020, most pedestrians 77% in EU countries died on straight road sections and the fewest pedestrians 1% died on traffic circles. In 74% of road accidents involving pedestrian fatalities, the road surface was dry and without precipitation, in 24% of road accidents the road surface was wet or dirty, and in only 1% was the road surface slippery or covered with snow and ice. (2,3)

3. Road safety in Republic if Croatia

In the Republic of Croatia, in the observation period from 2018 to 2022. 154,895 traffic accidents recorded by the police occurred, which corresponds to an average of 30,979 traffic accidents per year. The following table shows that the number of traffic accidents at the beginning of the observed five-year period was at a maximum of 33,440. There was a significant decrease in the number of traffic accidents in 2020, which was due to the Covid pandemic; the number of traffic accidents in that year was about 17% lower than the year before and after.

Table 1. *The number of traffic accidents in the Republic of Croatia in terms of consequences*

	2018	2019	2020	2021	2022
Traffic accidents	33 440	31 367	26 074	31 453	32 561
Traffic accidents (damage)	22 990	21 672	18 364	22 307	22 122
Traffic accidents (injured)	10 153	9 416	7 496	8 883	9 762
Killd	317	297	214	292	275

Traffic accidents can be divided into several different categories, one of the categories is regarding the consequences, in the consequences of traffic accidents a distinction is made between road accidents in which only property damage occurred, then in traffic accidents with injured participants and as traffic accidents with deceased participants. Traffic accidents with material damage

account for the largest proportion of all road traffic accidents with approximately 69%, followed by traffic accidents with injured participants with 30% and 1% of traffic accidents with fatalities. Based on the previously presented statistical data, the Republic of Croatia is above the average of European countries with 71.2 road traffic fatalities per million inhabitants. In the Republic of Croatia, road accidents are divided into different types depending on the characteristics of the traffic accident. The following table shows all types of road accidents and the number of road accidents with material damage, injured, and killed in each type of road accident.(4)

Table 2. *Number of traffic accidents by types*

Type of accident	Material damage	Injured	Fatal consequences
Side collision	20470	8584	100
Frontal collision	9413	5547	259
Bicycle collision	409	1737	58
Pedestrian collision	266	5733	234
Collision with animal	3415	157	1
Vehicle landing from the road	12333	9610	426
Vehicle collision with motorcycles	151	539	9
Collision with train	69	53	21
Collision with object near/on the road	13575	1941	80
Collision with parked vehicle	23547	512	7
Comparison driving	3523	907	9
Rear end collision	11325	7015	67
Other	4122	3114	24
Driving backwards	4712	225	0

The above table shows that the most common type of traffic accidents is a side collision 19%, a collision of a vehicle with a parked vehicle 16% and a departure from the roadway 14%, the least common traffic accidents are collisions with a rail vehicle, collisions between a vehicle and a motorcycle, and collisions with a bicycle. The number of people killed in relation to the number of traffic accidents by type of traffic accident is not reciprocal, so the most common type of traffic accident in the observed period of five years is a side collision, and the highest number of people killed, when looking at the cumulative number, is when a vehicle leaves the road, also the highest number of people injured is when the vehicle leaves the road. In the annual report on the state of safety in the Republic of Croatia, nowhere is the cause of traffic accidents mentioned, but the circumstances in which the traffic accident occurred. Thus, the most common circumstance that preceded the traffic accidents is a speed not adapted to the conditions, followed by disregarding the right of way and improper movement of vehicles on the road. In traffic accidents characterised by these three circumstances, there are more than 70% dead participants and about 60% injured. If we consider the traffic accidents in relation to the road geometry, we find that most traffic accidents occur on a straight road, about 40%, then at an intersection with a share of about 26% and in a curve with about 16%. Comparing the number of accidents on straight road sections, curves, and intersections with the number of fatalities, it can be seen that the number of fatalities is not reciprocal to the number of accidents. The proportion of accidents on a straight road section is 40%, the number of fatalities is 42%, and the proportion of accidents on a curve is only 16%, while the number of fatalities in the same accidents is 37%. Considering the above data, it can be concluded that the consequences of traffic accidents that occur in a curve are much more "dangerous". The specific cause of the traffic accidents is not known, as no detailed analysis of all accidents has been performed but given the significant number of people killed in curves in relation to the number of accidents, this is an indication that additional research on traffic accidents in curves is needed.

4. Pedestrian safety in Republic of Croatia

Along with motorcyclists and bicyclists, pedestrians are the most vulnerable group of road users, and pedestrian traffic is the most accessible form of traffic. In the Republic of Croatia, in the period from 2018 to 2022, 154,895 traffic accidents occurred, 45,679 traffic accidents with injured persons, including 6,233 traffic accidents with collisions with pedestrians, in the observed period, 1,395 people died, including 244 pedestrians. The proportion of traffic accidents marked as a collision with a pedestrian is 6,233, which is about 4% of the total number of traffic accidents, if we consider the number of injured pedestrians, which for a five-year period is 6,088 pedestrians, about 13%, and 244 pedestrians died, which is about 17% of all fatalities. Between 1,300 and 1,405 traffic accidents involving pedestrians occurred annually. The exception was 2020, when the number of traffic accidents involving pedestrians was less than 1,000, but the year indicated is not entirely relevant due to lower traffic volumes during the Covid pandemic.

Graph 1. *Number of traffic accident in period of five years*

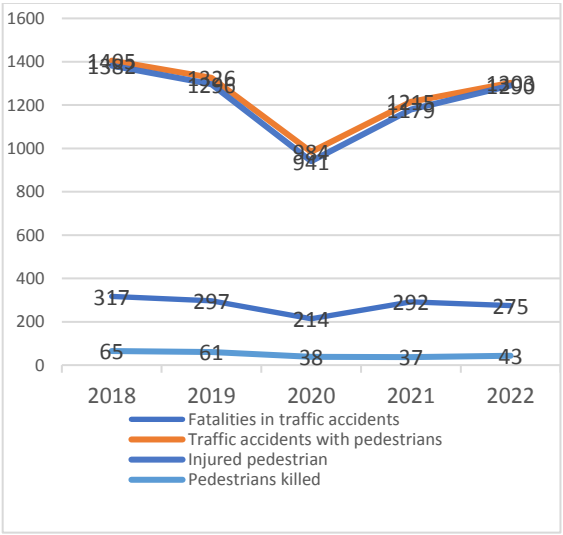

Graph 1 shows the relationship between traffic accidents involving pedestrians, the number of pedestrians injured, the number of pedestrians killed, and the total number of people killed in traffic for the observed period. In 2019, compared to 2018, there was a 6% decrease in the total number of persons killed in traffic, the number of traffic accidents involving pedestrians, the number of pedestrians injured and the number of pedestrians killed also decreased by 6%. In 2020, there was a positive trend of 28% fewer traffic fatalities compared to the previous year, the number of traffic accidents recorded a smaller decrease of 26%, the number of pedestrians injured decreased by 27%, while the number of pedestrians killed decreased by 38%. The year in question cannot be considered relevant because in 2020 there was a pandemic in the Republic of Croatia and the traffic of road users was significantly restricted, so the number of traffic accidents and the number of fatalities was lower. In 2021, a significant increase in the number of fatalities was recorded compared to the pandemic year 2020, the number of fatalities increased by 36%, the number of traffic accidents involving pedestrians increased by 23%, the number of injured pedestrians increased by 25%, and the number of pedestrians killed decreased by 3%. The total number of people killed and the number of pedestrian accidents increased significantly, while the number of pedestrians killed did not increase for an unknown reason, i.e., one less pedestrian

died than in 2020. In 2022, the total number of people killed was 275, the number of fatalities decreased by 6%, the number of traffic accidents involving pedestrians increased by 7%, the number of pedestrians injured increased by 9%, and the number of pedestrians killed increased by 16%. To determine the relationship between variables such as the number of traffic accidents, the number of fatalities, and the number of pedestrian accidents, the correlation coefficient between the above variables is calculated using the analysis presented previously. Since the data is not linear and a period of five years is considered, Spearman's correlation coefficient is applied according to the following formula:

$$r_s = 1 - \frac{6 \cdot \sum d^2}{n^3 - n}$$

Year	Traffic accidents	Pedestrian deaths	Rx	Ry	di	di^2
2018.	33440	65	1	1	0	0,00
2019.	31367	59	3	2	1	1,00
2020.	26074	36	3	5	-2	4,00
2021.	31453	37	2	4	-2	4,00
2022.	32561	40	1	3	-2	4,00
						13,00

***Table 3**. Calculation of Spearman coefficient*

Table 3 shows the construction table for the calculation of the Spearman correlation coefficient between the variable of traffic accidents and the total number of pedestrians killed for a period of five years. The Spearman correlation coefficient is 0.35, which means that the correlation between the total number of traffic accidents and the number of pedestrians killed is relatively weak.(5)



***Figure 1.** Locaton of pesestrian accidents wit fatal consequences*

Figure 1 shows all locations in the Republic of Croatia with traffic accidents in which pedestrians died. Visual inspection of the attached map clearly shows that traffic accidents involving pedestrian fatalities are concentrated in cities or urban areas. About 90% of traffic accidents involving pedestrians occur on county, township, and city roads, followed by 10% on national highways and less than 1% on freeways. Fatalities are similar, with 70% of pedestrian fatalities also occurring on county, local and city roads, 27% on state highways, and 3% on freeways. Looking at road conditions, most traffic accidents occurred on dry road 79%, followed by 21% on slippery road and a very small percentage on macadam. No pedestrian died in traffic accidents on macadam, 26% of pedestrian fatalities occurred on slippery roads, while the remaining 74% of fatalities occurred on dry roads.

A very significant analysis of pedestrian traffic accidents refers to the geometric elements of the road. At the Republic of Croatia, the road elements on which a traffic accident can occur are divided into 17 elements, which are listed in the following table.

***Table 4.** Number of traffic accidents with pedestrian and number of pedestrian deaths*

Geometric elements on the road	Traffic accidents with pedestrians	Pedestrian deaths
Bicycle path	27	1
Four-way intersection	888	20
A multi-level intersection	5	0
Y-intersection	116	5
T- intersection	910	23
Roundabout	72	3
Bridge	6	0
Overpass	1	0
Other	236	8
Parking	316	3
Pedestrian zone	250	1
Pedestrian crossing	787	26
Underpass	0	0
Crossing over the railroad	x	x
Straight road stretch	2318	114
Tunnel	0	0
Curve	291	30

Table 4 shows that not a single accident involving pedestrians at the railroad crossing was recorded, as according to the Road Traffic Safety Act of the Republic of Croatia, the collision of a train with a pedestrian is not considered a traffic accident and such events are therefore not recorded as traffic. The above table also shows that most accidents occurred on a straight stretch of road 37%, then at intersections 32% and at pedestrian crossings 13%. The number of traffic accidents involving pedestrian fatalities is also highest on a straight stretch of road at 49%, followed by 22% at junctions and 13% at a curve, 11% of pedestrians are killed at a pedestrian crossing. Looking at each geometric element separately, the geometric element curve has the highest percentage of people killed with 10%, followed by straight road sections with 5% and pedestrian crossings with 3%. From the previously analysed data, it can be concluded that it is necessary to subject four geometric elements to additional analysis: a straight road section, a curve, a pedestrian crossing and intersections, where traffic accidents involving pedestrians occur most frequently. When only intersections are considered, most traffic accidents and pedestrian fatalities occur at T-intersections. The calculation of the Spearman correlation coefficient between the geometric elements of the road and the number of pedestrians killed at these elements of 0.88 suggests that the correlation between the number of traffic accidents at the geometric elements and the number of fatalities at the same locations is significant. Increased attention should be paid to the curve, because about 16% of the recorded traffic accidents occur on the curve, and 37% of the fatalities occur on the curve. Looking at traffic accidents involving pedestrians on a curve, about 5% of traffic accidents involve pedestrians, but the number of pedestrians killed on a curve is about 13%.

It is not possible to determine the cause of a traffic accident without a detailed analysis and expert investigation of each accident. Therefore, the report on traffic safety in the Republic of Croatia does not indicate the cause of the traffic accident, but the circumstances that preceded the traffic accident. The circumstances of the traffic accident may also be the cause, but this cannot be determined without a detailed analysis of each individual accident. The circumstances of a traffic accident are divided into 21 types. The circumstances in which most traffic accidents involving pedestrians were recorded

were "other driver' error" 25%, inappropriate speed 16% and improper reversing 11%. traffic pedestrian fatalities, the order is slightly different: most pedestrian fatalities were due to inappropriate speed at 38%, followed by other driver error at 15% and other pedestrian error at 10%. This shows that the number of traffic accidents and fatalities is not linear in all circumstances. It can be concluded that inappropriate speed is the circumstance in which most pedestrians are killed. The Spearman coefficient for the number of traffic accidents involving pedestrians that occurred under certain circumstances and the number of pedestrians killed under the given circumstances is a high 0.94, which means that the circumstances of traffic accidents are correlated with the number of pedestrians killed under the same circumstances.(6)

5. Conclusion

Road traffic accidents are one of the leading causes of death in the world. Every year, an average of 1,240,000 road users are killed on the roads, of which about 20% are pedestrians. Considering the relatively low number of traffic accidents involving pedestrians, but the high percentage of pedestrians injured and killed, it can be clearly concluded that pedestrians are among the most vulnerable road users.

When writing the article, it was found that the number of pedestrians killed is not linear with the total number of traffic accidents, i.e. the correlation between the variables mentioned is negligible. This means that if the total number of traffic accidents is prevented and reduced, it does not mean that the number of pedestrians killed will also decrease. The number of pedestrians killed is also related to the geometric elements of the road and the circumstances in which the traffic accident occurred.

In order to take quality measures to reduce the number of injured and killed pedestrians, the exact cause of the traffic accident must be determined. The circumstances of the traffic accident cannot be considered as the cause, because to determine the cause of traffic accidents, a detailed expert opinion would have to be prepared for each individual accident.

The highest percentage of injured and fatally injured pedestrians occurred precisely under circumstances such as inappropriate speed and other driving errors, as well as with the geometric element "curve".

With the aim of reducing the number of pedestrians killed, it is necessary to make a more detailed analysis of the traffic accidents that occurred in the curve, traffic the circumstance of inappropriate speed due to the high correlation and the highest number of fatalities in the mentioned conditions.

4. Reference

1. Decae R. European Road Safety Observatory. European Commission. 2022;
2. European Transport Safety Council. How safe is walking and cycling in Europe? 2020;(38):1 file. Available from: www.etsc.eu/pin
3. European Road Safety Observatory. Facts and Figures - Padestrians. 2021;
4. Pokazatelja TS. Statistički p r e g l e d. Ministarstvo unutarnjih poslova. 2021;
5. Udovičić M, Baždarić K, Bilić-Zulle L, Petrovečki M. What we need to know when calculating the coefficient of correlation? Biochem Med (Zagreb). 2007;17(1):10–5.
6. Šarić Ž, Zovak G, Brkić D, Kučinić T. Analysis characteristic of hazardous locations in urban environments. Put i saobraćaj. 2020 Mar 26;66(1):29–32.

New temptations in the auto world in post-covid era

Nataša Tomić-Petrović,
University of Belgrade, Serbia,
e-mail: natasa@sf.bg.ac.rs

Abstract: *Misfortunes bring people together. Wars, the Covid pandemic, pollution of the environment in which we live. According to a report from "Lancet", nine million people die from pollution every year. The number of deaths from air pollution and chemical pollution has increased by 60% over the past two decades. Climate change took its toll in 2022 as well (floods, fires, earthquakes, drought and heat, melting glaciers). Uncontrolled urbanization and population growth are also causes. The number of people killed and injured in traffic accidents has also increased. It doesn't have to be driven faster than life.*

The war in Ukraine has been going on for a long time. The Russian auto industry will develop without Western partners ("Lada" model). Several of the largest German car manufacturers have decided to padlock their plants in Russia.

During September 2022, a rally was held in Serbia through four cities, Aranđelovac, Topola, Mladenovac and Belgrade. About 50 timeless vehicles visited these cities. There is also a small museum in Arandjelovac where the oldest car is a "Dodge" from 1924, a "Willys" from 1927, a "Chevrolet" from 1928, a "Pontiac" from 1929 and a "Mercedes" from 1934. Passing the Law on Old-timers will contribute to the preservation and increase of this cultural treasure, and it will make registration and acquisition easier for the owners.

In the new 2023. year, representatives of the Independent Trade Union of the "Fiat Chrysler Cars" factory (FCA) in Kragujevac announced on January 9th that they expect preparations for the start of electric vehicle production to continue with greater intensity in the new year. At the same time, the well-known "Tesla" company was fined about 2.2 million dollars, because it did not inform its customers of electric vehicles about the shorter driving range of their electric vehicles at low temperatures. The American electric vehicle maker's cold-weather driving range drops up to 50.5% compared to how they are advertised online (no mention of range loss in sub-zero temperatures).

KEY WORDS: *POLLUTION, CLIMATE CHANGE, ACCIDENT, AUTO INDUSTRY, OLD-TIMERS, ELECTRIC VEHICLES, WORLD.*

"At the meeting point of two rivers, the water is never calm".

Introduction

We must find solutions to wars and conflicts.

And in Vienna, the capital of Austria, fossil fuels for heating rooms will be a thing of the past, because it is intended to completely stop the emission of harmful gases by 2040. In mid-April of this year, 2023, Germany shut down the last three active nuclear reactors, (although plans for the gradual abolition of nuclear energy were adopted in 2011). Climate neutrality plans are underway.

The war in Ukraine has been going on for a long time. The Russian auto industry will develop without Western partners ("Lada" model). Several of the largest German car manufacturers have decided to padlock their plants in Russia.

Also, from the space agency NASA and the company "Boeing" in order to protect the environment, in the next five years, it is planned to create a prototype generation of aircraft, which emits significantly less harmful gases, and that: in the next decade, commercial flights with a new class of aircraft can begin. By developing new technology, the US administration's plan to achieve zero CO2/carbon dioxide emissions in aviation by 2050 would be realized.

New trends in auto world

Many international environmental agreements have been signed, so many companies in the world are racing to improve their products. Thus, in 2022, "Rolls-Royce"[1] and "Easy-jet" tested a hydrogen-powered aircraft engine. It is no longer terra incognita.

The public has learned that car manufacturers have been fined, namely in South Korea, three German car manufacturers have been fined a total of 33.5 million dollars and the reason given is "manipulation of emissions data". The German companies refused to admit responsibility and "Mercedes"[2] claims that they cooperated with all regulatory bodies.

And during 2021, in the procedure of the European Commission, "Volkswagen" and "BMW" were fined as much as 875 million euros due to the agreement on the use of technology for cleaner gas emissions.

In Spain, the new fifth generation of fully hybrid electric technology is installed in the "Corolla". This is a new power control unit /PCU/ which helps to reduce the level of electrical losses in the system and maintain fuel efficiency. A new "Espas" is also being produced in Spain, now as a hybrid, and sales will begin in the summer of 2023. It is the sixth generation of the legendary model.

In 2019, the factory from Shanghai, China first showed the electric SUV "HiPhi X" and then the electric sedan "HiPhi Z". The third new model belonging to this Chinese group ("Human Horizons") will arrive in April 2023. It is a new model "Hi PhiY", a light SUV with a length of 4.938 mm and a height of 1.658 mm. It is known that has 331 hp.

The Japanese company "Mitsuoka" presented an interesting version of the new "Toyota Jaris" in a retro style called "View Story". The model is inspired by Jaguar lines from the sixties of the last century. The advanced technique is noticeable.

"Peugeot" has refreshed the 508 model in all three body versions.

In Serbia, there are 418 vehicles registered per 1000 people. While in the European Union the average is 567 per 1000 people. In Romania there are as many as 398...

Traffic safety with old and new vehicles

However, since the beginning of the new year 2023, 45 people have died in traffic in Serbia. The Ministry of Internal Affairs of Serbia appealed for compliance with traffic regulations.

During September 2022, a rally was held in Serbia through four cities, Aranđelovac, Topola, Mladenovac and Belgrade. About 50 timeless vehicles visited these cities. There is also a small museum in Arandjelovac where the oldest car is a "Dodge" from 1924, a "Willys" from 1927, a "Chevrolet" from 1928, a "Pontiac" from 1929 and a "Mercedes" from 1934. Passing the Law on Old-timers will contribute to the preservation and increase of this cultural treasure, and it will make registration and acquisition easier for the owners.

In the new 2023.year, representatives of the Independent Trade Union of the "Fiat Chrysler Cars" factory (FCA) in Kragujevac announced on January 9th that they expect preparations for the start of electric vehicle production to continue with greater intensity in the new year. In April, the president of the factory union in Kragujevac announced that at the end of the year, trial series production of an electric vehicle should begin at the "Stellantis" factory in Kragujevac, Serbia. It is not yet known which model it will be. Full production is expected to start in 2024. For now, modern equipment is being intensively installed in two factory bodies.

The largest number of electric vehicles was sold in China, and China announced 80 new models of electric vehicles. At the same time, the well-known "Tesla" company was fined about 2.2 million dollars, because it did not inform its customers of electric vehicles

[1] The test was carried out on the ground and represented the world's first ride of a hydrogen-powered aircraft engine.

[2] And during the last year 2022 in South Korea, "Mercedes" was fined 11.5 million euros for false advertising related to the emission of diesel cars.

about the shorter driving range of their electric vehicles at low temperatures. The American electric vehicle maker's cold-weather driving range drops up to 50.5% compared to how they are advertised online (no mention of range loss in sub-zero temperatures).

What is the future of traffic signaling in the era of smart roads and autonomous vehicles? The development and improvement of traffic signals [see: 1] accompany and in a certain sense cause innovations and attained achievements. With the more frequent use of autonomous vehicles, various issues have been raised, among which the place and importance of sensors [2] and traffic signaling is discussed in particular. However, some of the predicted benefits of AVs may not eventuate until a lengthy transition period is complete. [3]

There will be one hundred chargers for electric cars on Serbian roads next year. The plan is also to introduce a legal obligation for every third parking space in new buildings to have an electric charger. It is being considered to reduce the amount of tolls for owners of electric and possibly hybrid vehicles. As of January 2021, there are three ultra-fast electric chargers with a maximum output of 175 kilowatts on the main roads. Two chargers are located on the plateau of the former toll station "Niš" and one at the toll station "Belgrade". Currently, 8 chargers for electric cars are installed at key points on the main road routes in our country. Electric chargers with a power of 22-50 kilowatts are located on the plateaus of the toll stations "Preševo", "Šid", "Dimitrovgrad", "Subotica", "Boljkovci" - on the highway "Miloš Veliki", near the toll station "Ljig".

Otherwise, in the world, in Germany and the USA, the problem is the lack and unavailability of charging stations, so the European Commission allowed Germany to finance the construction of 8,500 chargers for fast charging of electric vehicles and gave a huge subsidy. EU member states must seek approval from Brussels for their subsidies. From the European Commission, F. Timerans, in charge of the "Green Deal", reminded that all vehicles on the soil of the European Union will have zero carbon dioxide emissions by 2035.

How to facilitate cargo transportation in the European Union?

The member states of the European Union do not have transport permits, because they belong to the single market, and our country Serbia is trying to achieve identical conditions. There are three types of transport permits: - a bilateral permit enables transport between Serbia and another country and between that country and Serbia, - transit permits enable the transport of Serbian carriers across the territory of another country, - permits to and from a third country allow a Serbian carrier to transport cargo from a certain country to a third country, which is not Serbia.

Serbia has agreed on the liberalization of all or certain types of international freight transport with the former Yugoslav republics, Bulgaria, Romania, Switzerland, Great Britain, the Czech Republic, Hungary, Slovakia, Lithuania, Estonia, Kazakhstan and the Russian Federation. Liberalization was agreed with 16 countries, nine of which are EU member states.

German licenses are in great demand, as important destinations and crossroads to other European countries.

Stricter rules for driving licenses in the EU are also being introduced. During 2022, young people participated in two out of five traffic accidents with fatal outcomes. The new rules include the introduction of zero tolerance for driving under the influence of alcohol. Urban mobility is also being pushed more and more in the EU. [4] The Commission wants to introduce a digital driver's license. The legislative procedure of the European Parliament and the Council is now underway, and the plan is to expand the list of offenses that risk lives in traffic (failure to maintain sufficient distance between vehicles, dangerous passing and parking, crossing the solid white line, driving in the wrong direction).

Conclusion

The new European law on cars predicts that after 2035 it will no longer be possible to produce and register internal combustion vehicles. In order for the law to be adopted, a majority of 55% of countries representing 65% of the population of the European Union is required.

We are going to start with the construction of electric vehicles in the factory in Kragujevac. Fires, droughts, floods and devastating earthquakes (in New Guinea, Mexico, Afghanistan and Turkey) along with the melting of glaciers did not pass by us. And war operations in Ukraine continue while these lines are written. And in Turkey, the construction of the newest generation nuclear power plant "Akuju" has started.

Misfortunes bring people together. Wars, the Covid pandemic, pollution of the environment in which we live. According to a report from "Lancet", nine million people die from pollution every year. The number of deaths from air pollution and chemical pollution has increased by 60% over the past two decades. Climate change took its toll in 2022 as well (floods, fires, earthquakes, drought and heat, melting glaciers). Uncontrolled urbanization and population growth are also causes. The number of people killed and injured in traffic accidents has also increased. It doesn't have to be driven faster than life.

Literature

[1] Regulation on traffic signaling, "Official Gazette RS", no 85/17, 14/21.

[2] Van Brummelen J, et all, "Autonomous vehicle perception: The technology of today and tomorrow", Transp. Res. Part C Emerg.Technol., vol.89, no. March, 2018, pp. 384-406,

[3] Kellett J, Barreto R, A. Van Den Hengel and Vogiatzis N, "How Might Autonomous Vehicles Impact the city? The Case of Commuting to Central Adelaide", Urban Policy Res., vol.37, no 4, 2019, pp. 442-457.

[4] Atkins Mobility, "Connected & Autonomous Vehicles – Introducing the Future of Mobility", 2019.

Effect of adding hydrogen to a primary fuel on enjine operating modes

Koba Lortkipanidze , Vladimer Gvetadze, Teimuraz Kochadze
Akaki Tsereteli State University
E-mail: lortkipanidze.koba@atsu.edu.ge, vladimer.gvetadze@atsu.edu.ge , , teimuraz.kochadze@atsu.edu.ge

Abstract. *Hydrogen has a good environmental performance, high energy characteristics, high burning rate and low ignition temperature. In case of using hydrogen as a primary fuel in an internal combustion engine, there is a drop in power and detonation combustion at high load modes, so hydrogen is best used in a composition with the primary fuel.*
In the mode of partial load, the hydrogen content in the fuel mixture decreases, and it should decrease as the load increases, and in the mode of full load, its amount is minimal, which will allow us to maintain the power characteristics, otherwise the power will decline.
The main thing is to know in which mode what should be the ratio of hydrogen and the primary fuel, which ensures the normal flow of the operation process, which will result in primary fuel economy and reducing the toxicity of exhaust gases.
Based on the studies conducted, we can conclude that it is preferable for the engine to work with a high content of hydrogen in the fuel mixture at no load and at light loads, its concentration should decrease as the load increases.
KEY WORDS: *INTERNAL COMBUSTION ENGINE; HYDROGEN ADDITIVE; FUEL SUPPLY SYSTEM; POWER, ECOLOGY.*

1. Introduction

Undesirable anthropogenic changes in the ecosystem occur during the operation of motor transport. If we take into account the fact that the level of environmental pollution is quite high and environmental threats are growing, attention should be paid to the use of such fuels, whose economic and environmental efficiency will prove to be high. The need to switch to alternative fuels is also confirmed by the fact that oil stocks are irreplaceable and their current amount is expected for several decades. From an environmental perspective, hydrogen is an ideal fuel. It burns in pure oxygen and releases water. Hydrogen is ыщыедн obtained from hydrocarbons, where up to 85% is carbon, the main part of the amount of heat is released as a result of burning. Hydrogen has good environmental performance characteristics, high energy performance, high burning speed and low ignition temperature.

In the 1970s, the world experienced an energy crisis, which strengthened interest in hydrogen fuel, which has a high energy capacity of 120-103 kJ/kg, which is 2.8 times more than the energy capacity of diesel fuel, although hydrogen fuel requires 2.3 times more oxygen.

To use hydrogen as a fuel in gasoline and diesel engines, it is necessary to make changes in the design of the fuel supply system. During external mixing, cylinder filling deteriorates and power drops due to low hydrogen density. During internal mixing, the energy capacity of the charge can be increased or maintained at the existing diesel fuel level. From this it is assumed that the use of hydrogen is more favorable in diesels. For self-ignition of the mixture of hydrogen and air in the cylinder, it is necessary to increase the temperature at the end of compression, which would be achieved by pressure charging or by heating the charge during the filling process.

2.Preconditions and means for resolving the problem

In case of using hydrogen as a primary fuel in an internal combustion engine, there is a drop in power and detonation combustion at high load modes, so hydrogen is best used in a composition with the primary fuel. The main thing is to know in which mode what should be the ratio of hydrogen and the primary fuel, which ensures the normal flow of the operation process, which will result in primary fuel economy and reducing the toxicity of exhaust gases. Based on experimental data, a team of researchers [1] has developed a method that allows us to determine in each specific case the ratio of hydrogen and gasoline in the mixture, which ensures good operational characteristics.

The methodology is based on determining the amount of thermal energy released during the combustion process and allows theoretically calculating the optimal ratio of gasoline and hydrogen in the mixture for each specific mode.

In general, the amount of hydrogen to be added to the primary fuel is calculated by the formula [3]:

$$G_{H_2} = \frac{r \cdot G_D}{1 + r \cdot \frac{Hu_{H_2}}{Hu_D}}$$

where $r = \frac{GH_2}{G_D}$, G_{H2} and G_D are the quantities of hydrogen and diesel fuel, respectively, while H_{UH2} and H_{UD} are the heat capacities of hydrogen and diesel fuel, respectively.

As is known, idle and warm-up modes are characterized by unfavorable conditions for the combustion of the fuel mixture (cold engine, etc.), due to which there is an incomplete combustion of the mixture and an increase of toxic components in the exhaust gases. Therefore, to ensure relatively complete combustion, an active additive (hydrogen) can be used in a certain dose, which will lead to the emergence of additional active centers, and due to its physico-chemical properties, the engine operation moves to the stoichiometric and lean mixture zone, and the combustion process becomes more complete. Therefore, it is desirable to make the engine work with a high content of hydrogen in the fuel mixture during idle and warm-up modes.

In the mode of partial load, the hydrogen content in the fuel mixture decreases, and it should decrease as the load increases, and in the mode of full load, its amount is minimal, which will allow us to maintain the power characteristics, otherwise the power will decline. The paper [2] presents the results of a static engine test, which showed that the addition of hydrogen to the primary fuel at idle and warm-up modes resulted in a reduction of CO and CH, while NO and CO_2 remained unchanged. The results of the static test of the engine were checked and confirmed during the dynamic test, which proves the effectiveness of using hydrogen as an additive, ensuring the sustainable operation of the engine and expanding the limits of fuel mixture leaning.

The main source of the formation of hydrocarbons is the incomplete combustion of the mixture. In particular, when touching the cold walls of the combustion chamber, the flame is extinguished, such zones contribute to the release of CH. Another source of CH formation is oil entering the cylinder due to incomplete cleaning of oil from the walls by the oil rings and also due to oil leakage in the gaps between the valve stem and the guide. An increase in the concentration of hydrogen in the fuel mixture contributes to the reduction of CH due to the appearance of additional “active” centers by improving the combustion process, which can be clearly seen in Figure 1. When the concentration of hydrogen in the fuel mixture is >70%, then the amount of hydrocarbons decreases to zero.

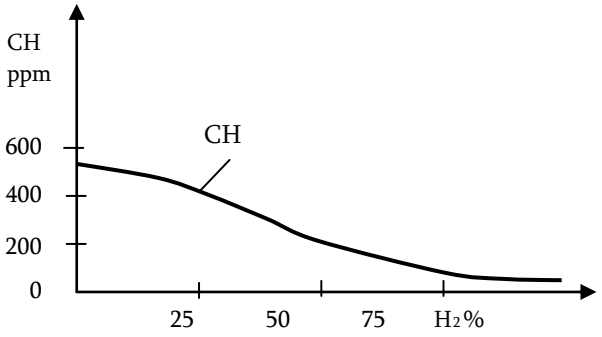

Fig. 1. *Change of hydrocarbons depending on the concentration of hydrogen in the fuel mixture*

Figure 2 illustrates how the amount of hydrocarbons in the fuel mixture changes depending on the temperature at different concentrations of hydrogen.

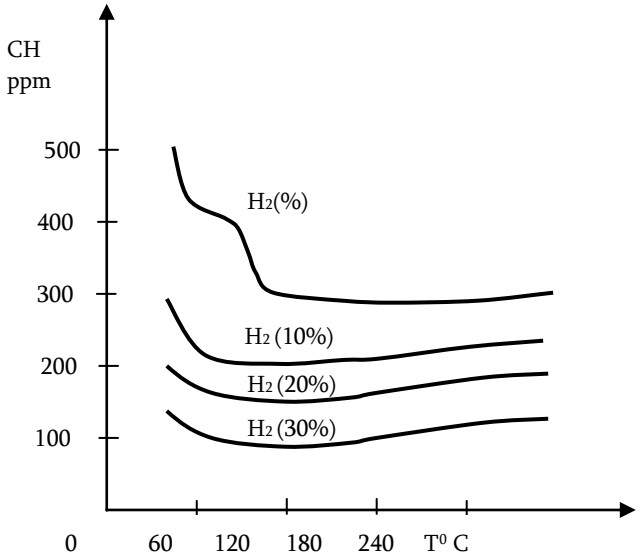

Fig. 2. *The change of hydrocarbons in the fuel mixture at different concentrations of hydrogen depending on the temperature*

As for nitric oxide (NO), its formation is determined by the temperature regime of combustion of the mixture. The higher the combustion temperature (T_{max}), the higher the formation of NO, that is, NO=f(T_{max}). Σ

NOx emission can be reduced by leanening the working mixture, when a>1.8 NO_x decreases to zero. Supplying water with ≈8 times more mass of hydrogen during the filling cycle reduces the emission of nitric oxides by ≈8 times. The following formula can be used to determine the amount of nitric oxides in the exhaust gases [3]:

$$G_{NO_x} = A \cdot \varphi_z \sqrt{\frac{(\alpha_\Sigma - 1)\tau\left(G_T + G_{H_2}\right)}{\eta_V \cdot i \cdot V_R \cdot n^3}} \cdot e^{-E/RT_z}$$

where α_Σ- is a total excess air factor;

φ_z- the time from the start of the combustion process to P_z depending on the crankshaft rotation angle;

T_Z- maximum combustion temperature, K;

G_T- diesel fuel consumption, kgph

G_{H2}- hydrogen consumption, kgph

n- rotational rate, rpm

V_R- cubic capacity, liter

τ- cyclicity

A-coefficient, A=8.61*109

i- number of cylinders

η_V- fill factor

Figure 3 illustrates the change in the nitric oxide concentration depending on the excess air factor.

Hydrogen used as an additive to the primary fuel also helps to reduce the concentration of carbon dioxide, what can be clearly seen in Figure 3, where the change in the CO concentration depending on the excess air factor.

Carbon monoxide is a product of incomplete combustion, which is a toxic substance and has a negative impact on the environment. To reduce it, a number of measures should be taken, including the addition of hydrogen to the fuel mixture in a certain dose, which moves the engine operation into the stoichiometric and lean mixture zone and the combustion process becomes more complete, and as a result, CO is reduced.

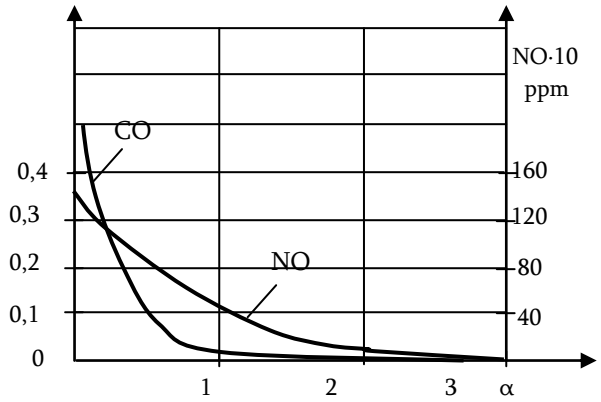

Fig.3. *Change in the nitric oxide and carbon dioxide concentrations depending on the excess air factor*

In the near future, adding hydrogen to the fuel mixture in the limits of 20% may become optimal for hybrid vehicles.

3. Conclusion

Based on the studies conducted, we can conclude that it is preferable for the engine to work with a high content of hydrogen in the fuel mixture at no load and at light loads, its concentration should decrease as the load increases. The use of hydrogen as an additive allows us to increase the engine's efficiency, the maximum value of which when working on hydrogen is much higher than when the engine is working on gasoline

4. References

1. Bachana Markelia. Development of a technological process for using hydrogen obtained from hydrogen sulfide as an alternative fuel in transport internal combustion engines. Doctoral dissertation. ATSU 2019. 140p.
2. M.M. Rusakov et al. The effect of adding hydrogen on toxicity of ICE in starting and warm-up modes.
3. Proceeding of the Russian Scientific-Technical Conference with international participation. NO. 4. M.:2016.
4. V. Gvetadze, T. Kochadze, k. Lortkipanidze. INCREASIBG THE EFFICIENCY OF THE COMBUSTION PROCESS BY USING ACTIVE ADDITIVES IN SHIP DIESEL ENGINES.
5. S.V. Novoselov Study of the possibility of using hydrogen as a fuel for reciprocating internal combustion engines, Chemical Technology, 2016. p. 91-95.